Top 100
Global
Innovator
for 10 years

General AC Drive

G100 / G100C

3Phase 200V-240V 0.4kW-22kW (1/2-30HP)
3Phase 380V-480V 0.4kW-22kW (1/2-30HP)

3Phase 200V-240V 0.4kW-4.0kW (1/2-5HP)
3Phase 380V-480V 0.4kW-4.0kW (1/2-5HP)

LS ELECTRIC

Contents

General Drive

NEW

G100/G100C

The G100 is the solution for general drive applications because of its high performance sensorless vector control premium quality and high reliability.

Great Reliability

- Meets UL 61800-5-1
- Military (MIL 217Plus) design based methodology
- Enhanced materials and manufacturing processes

Great Performance

- Enhanced motor control-sensorless & V/F performance
- User-friendly-easy tuning sensorless control
- Suitable for most applications

User Friendly

- Easy to install, use and maintain
- All in One Industrial Ethernet Solution RAPIEnet+ (RAPIEnet, EtherNet/IP, Modbus TCP)

Great Reliability

G100 is designed to meet global standards through upgraded design, materials and manufacturing improving its endurance for harsh environments.

UL 61800-5-1 Design

Satisfied the new UL certification



Robust Design

Construction of the air flow design minimizes exposure of critical components (IGBT, PCB, etc.) from outside contaminants.

Built-in EMC Filter

Built-in C3 EMC filter and external option C2 EMC filter(footprint type) to meet EN61800-3 standards.
(For more information about external option C2 EMC filter[footprint type], please check page 30~31.)

Fan Lifecycle Diagnosis

A keypad displays a replacement warning at 50,000 hours of fan operating time or user setting level of fan replacement.
(A multi-function relay is available for replacement warning.)

MIL217Plus Based Design

• Enhanced reliability based on MIL217Plus

Category	G100
Estimated Life Cycle	240,455 hrs(27 yrs) (Accelerated life test result : 295,951 hrs)
Reliablity Test Method	MTTF
Standard	MIL-HDBK-217F RIAC HDBK 217Plus
Ambient Temperature	30°C (86°F)

Material Design

• Enhanced thermal resistance and intensity through upgraded materials
• Increased thickness to prevent damage

Great Performance

The G100 has an advanced sensorless vector control along with a highly adaptable V/F mode making it one of the most versatile drives on the market.

V/F Acceleration and Deceleration Function

- Auto torque boost(ATB) enhancing acceleration performance on V/F mode
- Flux braking enhancing deceleration performance on V/F mode

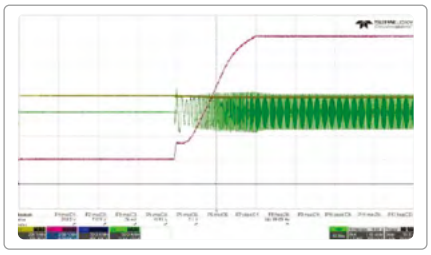

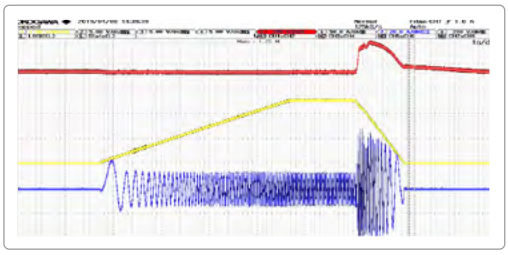

Sensorless Vector Control

Performs enhanced high torque under low speed with sensorless vector control

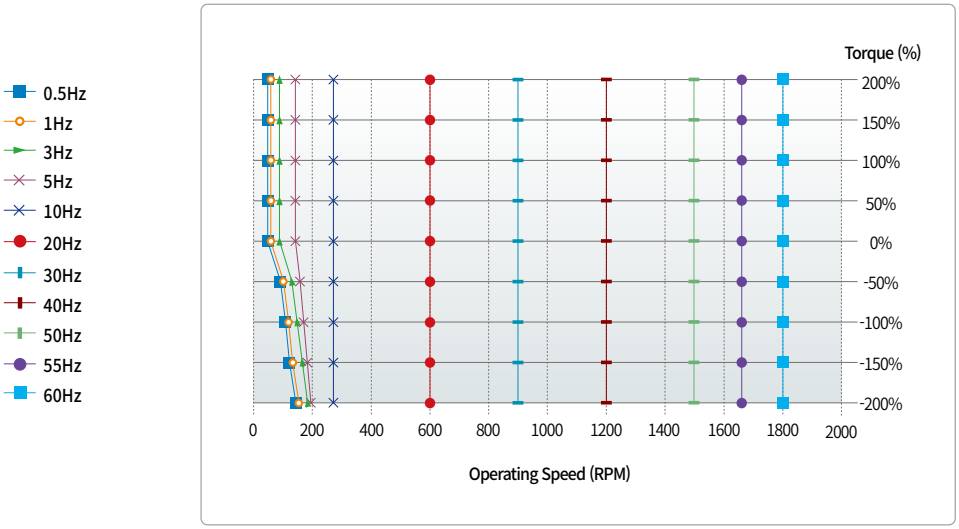

KEB Operation (Kinetic Energy Buffering)

DC link voltage is maintained during power loss or blackout by using regenerative energy from a motor.

Flying Start

Select optimal flying start operation for different applications

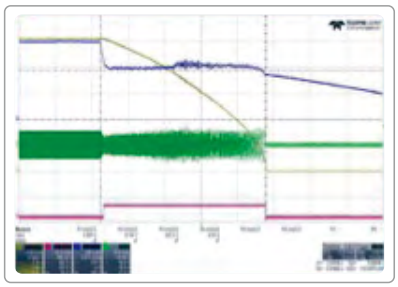

KEB Operation

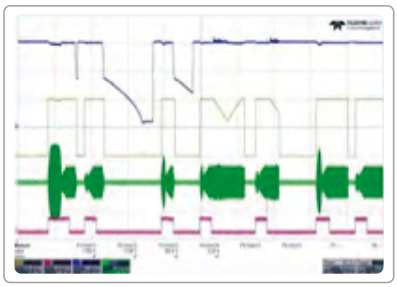

Flying Start Operation

User-friendly Design

G100 is convenient to install, control, G100 is convenient for installation, control, and maintenance with diverse functions.

❶ Built-in Potentiometer

Easy operation with built-in potentiometer

❷ Remote Keypad

Copy parameter (Read/Write) using remote keypads

❷ Smart Copier

Copy parameter (Read/Write) and download firmware without supplying power to drive

※ When you switch iG5A to G100, please contact us for remote bracket.

❷ Various communication options

Provides Dual Port Ethernet option, **RAPIEnet+**

About **RAPIEnet+**

Real-time, hybrid & ring topology-based industrial Ethernet solution, integrating Modbus TCP/IP, EtherNet/IP and RAPIEnet for IoT and future-oriented technology for high performance & efficiency.

- RAPIEnet+ (RAPIEnet, EtherNet/IP, Modbus TCP Protocol support)
- Profibus-DP, CANopen

❷ PC Tools (DriveView 9)

New version of PC tool

❷❻ Easy Modbus Communication Connection

2 type of connection of Modbus communication

- RJ45 Port
- I/O (S+, S-)

❸ QR Code

View manuals and various information from the QR code printed on the front cover.

❹ DIN rail for Side by Side installation

Easy installation with DIN rail (up to 4kW)

❺ Fan Replacement

Simple cooling fan replacement procedure

❻ I/O Terminal for convenient wiring

Easy wiring with 5mm I/O pitch

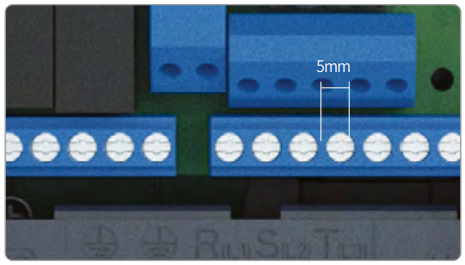

Model Name and Description

G100

Drive Capacity	3-Phase 200V	3-Phase 400V
0.4 kW	LSLV0004G100-2EONN	LSLV0004G100-4EO(F)N
0.75 kW	LSLV0008G100-2EONN	LSLV0008G100-4EO(F)N
1.5 kW	LSLV0015G100-2EONN	LSLV0015G100-4EO(F)N
2.2 kW	LSLV0022G100-2EONN	LSLV0022G100-4EO(F)N
4.0 kW	LSLV0040G100-2EONN	LSLV0040G100-4EO(F)N
5.5 kW	LSLV0055G100-2EONN	LSLV0055G100-4EO(F)N
7.5 kW	LSLV0075G100-2EONN	LSLV0075G100-4EO(F)N
11 kW	LSLV0110G100-2EONN	LSLV0110G100-4EO(F)N
15 kW	LSLV0150G100-2EONN	LSLV0150G100-4EO(F)N
18.5 kW	LSLV0185G100-2EONN	LSLV0185G100-4EO(F)N
22 kW	LSLV0220G100-2EONN	LSLV0220G100-4EO(F)N

※ (F): Built-in EMC or Non-EMC type

G100C

Drive Capacity	3-Phase 200V	3-Phase 400V
0.4 kW	LSLV0004G100C-2EONN	LSLV0004G100C-4EONN
0.75 kW	LSLV0008G100C-2EONN	LSLV0008G100C-4EONN
1.5 kW	LSLV0015G100C-2EONN	LSLV0015G100C-4EONN
2.2 kW	LSLV0022G100C-2EONN	LSLV0022G100C-4EONN
4.0 kW	LSLV0040G100C-2EONN	LSLV0040G100C-4EONN

※ G100C-2/4 4kW will be released in 2023

Model Name

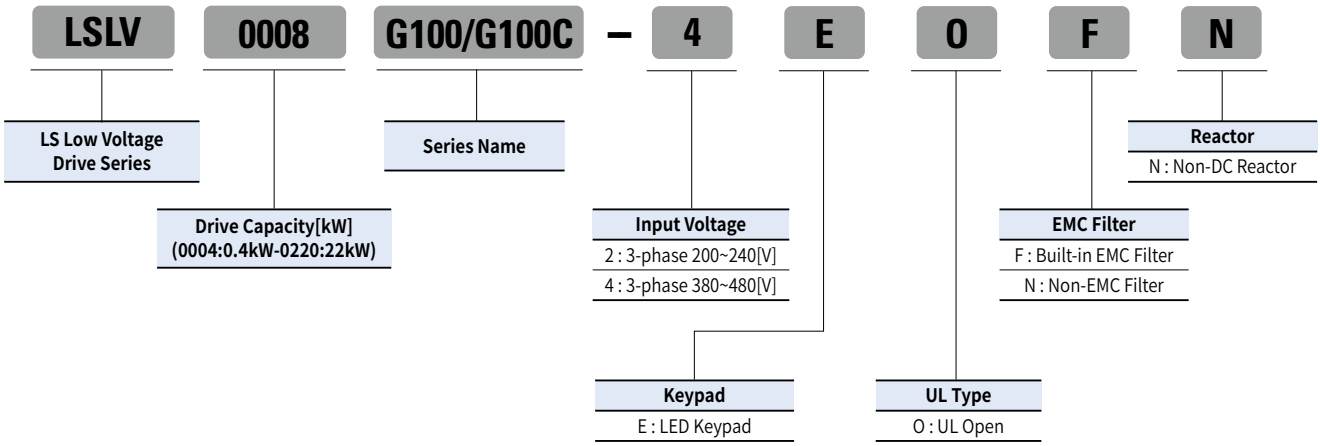

Specifications

3-Phase 200V Class (0.4~22kW)

LSLV□□□□G100(C)-2□□□□			0004	0008	0015	0022	0040	0055	0075	0110	0150	0185	0220
Motor Rating	Heavy Duty [HD]	[HP]	0.5	1.0	2.0	3.0	5	7.5	10	15	20	25	30
		[kW]	0.4	0.75	1.5	2.2	4.0	5.5	7.5	11	15	18.5	22
	Normal Duty [ND]	[HP]	1.0	2.0	3.0	5	7.5	10	15	20	25	30	-
		[kW]	0.75	1.5	2.2	4.0	5.5	7.5	11	15	18.5	22	-
Output Rating	Capacity [kVA]	Heavy Duty (HD)	1.0	1.9	3.0	4.2	6.5	9.1	12.2	17.9	22.9	28.6	33.5
		Normal Duty (ND)	1.2	2.3	3.8	4.6	6.9	11.4	15.2	21.3	26.7	31.2	-
	Rated Current [A]	Heavy Duty (HD)	2.5	5.0	8.0	11.0	17.0	24.0	32.0	47	60	75	88
		Normal Duty (ND)	3.1	6.0	9.6	12.0	18.0	30.0	40.0	56	70	82	-
	Rated Current [A]/60Hz (1-Phase Input)	Heavy Duty (HD)	1.5	2.8	4.6	6.1	9.3	12.8	17.4	26.8	34	41	48
		Normal Duty (ND)	2.0	3.6	5.9	6.7	9.8	16.3	22.0	31	38	45	-
	Rated Current [A]/50Hz (1-Phase Input)	Heavy Duty (HD)	1.5	2.7	4.5	5.9	9.1	12.4	16.9	26	33.1	39.9	46.7
		Normal Duty (ND)	1.9	3.5	5.7	6.5	9.5	15.8	21.3	30	36.9	43.7	-
	Frequency [Hz]		0~400Hz(IM Sensorless: 0~120Hz)					0~400Hz(IM Sensorless: 0~120Hz)					
	Voltage [V]		3-Phase 200~240V					3-Phase 200~240V					
Input Rating	Voltage [V]		3-Phase 200~240VAC (-15%~+10%)					3-Phase 200~240VAC (-15%~+10%)					
	Frequency [Hz]		50~60Hz (±5%)					50~60Hz (±5%)					
	Rated Current [A]	Heavy Duty [HD]	2.2	4.9	8.4	11.8	18.5	25.8	34.9	53.2	68.4	85.5	101.6
		Normal Duty [ND]	3.0	6.3	10.8	13.1	19.4	32.7	44.2	63.8	79.8	94.6	-
G100 Weight [kg]			1.04	1.06	1.36	1.4	1.89	3.08	3.21	4.84	7.6	11.1	11.18
G100C Weight [kg]			0.81	0.83	1.10	1.13	1.78	-	-	-	-	-	-

• Applicable capacity range with G100C (0.4kW~2.2kW) • G100C doesn't support built-in EMC filter. (Not possible to add filter)

3-Phase 400V Class (0.4~22kW)

LSLV□□□□G100(C)-4□□□□			0004	0008	0015	0022	0040	0055	0075	0110	0150	0185	0220
Motor Rating	Heavy Duty [HD]	[HP]	0.5	1.0	2.0	3.0	5	7.5	10	15	20	25	30
		[kW]	0.4	0.75	1.5	2.2	4.0	5.5	7.5	11	15	18.5	22
	Normal Duty [ND]	[HP]	1.0	2.0	3.0	5	7.5	10	15	20	25	30	40
		[kW]	0.75	1.5	2.2	4.0	5.5	7.5	11	15	18.5	22	30
Output Rating	Capacity [kVA]	Heavy Duty (HD)	1.0	1.9	3.0	4.2	6.5	9.1	12.2	18.3	23.6	29.7	34.3
		Normal Duty (ND)	1.5	2.4	3.9	5.3	7.6	12.2	17.5	23.6	29.0	34.3	46.5
	Rated Current [A]	Heavy Duty (HD)	1.3	2.5	4.0	5.5	9.0	12.0	16.0	24	31	39	45
		Normal Duty (ND)	2.0	3.1	5.1	6.9	10.0	16.0	23.0	31	38	45	61
	Rated Current [A]/60Hz (1-Phase Input)	Heavy Duty (HD)	0.7	1.4	2.1	2.8	4.9	6.4	8.7	15	18	23	27
		Normal Duty (ND)	1.3	1.9	2.8	3.6	5.4	8.7	12.6	18	23	27	35
	Rated Current [A]/50Hz (1-Phase Input)	Heavy Duty (HD)	0.7	1.4	2.0	2.7	4.8	6.2	8.5	14.6	17.4	22.3	26.2
		Normal Duty (ND)	1.3	1.8	2.7	3.5	5.2	8.4	12.2	17.4	22.2	26.1	33.8
	Frequency [Hz]		0~400Hz(IM Sensorless: 0~120Hz)					0~400Hz (IM sensorless: 0~120Hz)					
	Voltage [V]		3-Phase 380~480V					3-Phase 380~480V					
Input Rating	Voltage [V]		3-Phase 380~480VAC (-15%~+10%)					3-Phase 380~480VAC (-15%~+10%)					
	Frequency [Hz]		50~60Hz (±5%)					50~60Hz (±5%)					
	Rated Current [A]	Heavy Duty [HD]	1.1	2.4	4.2	5.9	9.8	12.9	17.5	27.2	35.3	44.5	51.9
		Normal Duty [ND]	2.0	3.3	5.5	7.5	10.8	17.5	25.4	35.3	43.3	51.9	70.8
G100 Weight [kg] (EMC Filter Built-in)			1.02 (1.04)	1.06 (1.08)	1.4 (1.44)	1.42 (1.46)	1.92 (1.98)	3.08 (3.24)	3.12 (3.28)	4.89 (5.04)	4.91 (5.06)	7.63 (7.96)	7.65 (7.98)
G100C Weight [kg]			0.82	0.85	1.14	1.14	1.77	-	-	-	-	-	-

• Applicable capacity range with G100C (0.4kW~2.2kW)
• G100C doesn't support built-in EMC filter. (Not possible to add filter)
• Maximum applicable capacity is indicated in case of using a 4-pole standard motor
• For the rated capacity, 200 and 400V class input capacities are based on 220 and 440V, respectively.
• The rated output current is limited based on the carrier frequency set at Cn.04.
• The output voltage becomes 20-40 % lower during no-load operations to protect the inverter from the impact of the motor closing and opening (0.4-4.0 kW models only).

Specifications

Control

Control Method	V/F, Slip Compensation, Sensorless Vector
Frequency Setting Resolution	Digital command: 0.01Hz Analog command: 0.06Hz(maximum frequency: 60 Hz)
Frequency Accuracy	1% of the maximum output frequency
V/F Pattern	Linear, squared, user V/F
Overload Capacity	HD: 150% 1 minute, ND: 120% 1minute
Torque Boost	Manual/Automatic torque boost

Operation

Operation Mode		Select key pad, terminal strip, or communication operation	
Frequency Setting		Analog: -10~10[V], 0~10[V], 4~20[mA] Digital: Keypad	
Operation Function		PID control, 3-wire operation, Frequency limit, Second function, Anti-forward and reverse direction rotation, Commercial transition, Speed search, Power braking, Leakage reduction, Up-down operation, DC braking, Frequency jump, Slip compensation, Automatic restart, Automatic tuning, Energy buffering, Flux braking, Fire mode	
Input	Multi-Function Terminal (5 Points)	NPN (Sink) / PNP (Source) Selectable	
		Function: Forward run, Reverse run, Reset, External trip, Emergency stop, Jog operation, Multi-step frequency-high, middle, low, Multi-step acceleration/ deceleration-high, middle, low, DC braking at stop, 2nd motor select, Frequency up/down, 3-wire operation, Change into normal operation during PID operation, Change into main body operation during option operation, Analog command frequency fixing, Acceleration/deceleration stop etc. Selectable	
	Analog Input	V1: -10~10V, I2 4~20mA	
Output	Multi-function Relay Terminal	Fault output and drive operation status output	(N.O., N.C.) less than AC 250V 1A, less than DC 30V 1A
	Analog Output	0~12Vdc: Frequency, Output current, Output voltage, DC stage voltage etc. selectable	

Protective Function

Trip	Over current trip, external signal trip, ARM short current fault trip, over heat trip, input imaging trip, ground trip, motor over heat trip, I/O board link trip, no motor trip, parameter writing trip, emergency stop trip, command loss trip, external memory error, CPU watchdog trip, motor light load trip	Over voltage trip, temperature sensor trip, inverter over heat, option trip, output image trip, inverter overload trip, fan trip, pre-PID operation failure external brake trip, low voltage trip during operation, low voltage trip, analog input error, motor overload trip, over torque trip, under torque trip
Alarm	Command loss trip warning, overload warning, light load warning, inverter overload warning, fan operation warning, braking resistance braking rate warning, rotor time constant tuning error, inverter pre-overheat warning, over torque warning, under torque warning	
Momentary Power Loss	HD below 15ms (ND below 8ms): Continuous operation (To be within rated input voltage, rated output) HD above 15ms (ND above 8ms): Automatic restart operation enable	

Environment

Cooling Type	Forced fan cooling structure
Protection Degree	IP20/UL Open (Default), UL Enclosed type 1 (Option), IP30(Remote Keypad)
Ambient Temperature	Ambient temperature under the condition of no ice or frost. HD: -10~50°C(14~122°F) / ND: -10~40°C(14~104°F) [However, recommended to use load below 80% when using at 50°C under light load]
Humidity	Relative humidity below 95% RH (no dew formation)
Storage Temperature	-20~65°C(-4~149°F)
Surrounding Environment	Environment Level: 3C3(IEC60721-3-3) classifications (for SO2, H2S, CL, NO2) No corrosive gas, flammable gas, oil mist and dust etc., indoors
Altitude, Vibration	Below 1,000m (From 1000 to 4000m, the rated input voltage and rated output current of the drive must be derated by 1% for every 100m.), below 9.8m/sec2 (1G)
Pressure	70~106kPa

Wiring

0.4~7.5kW

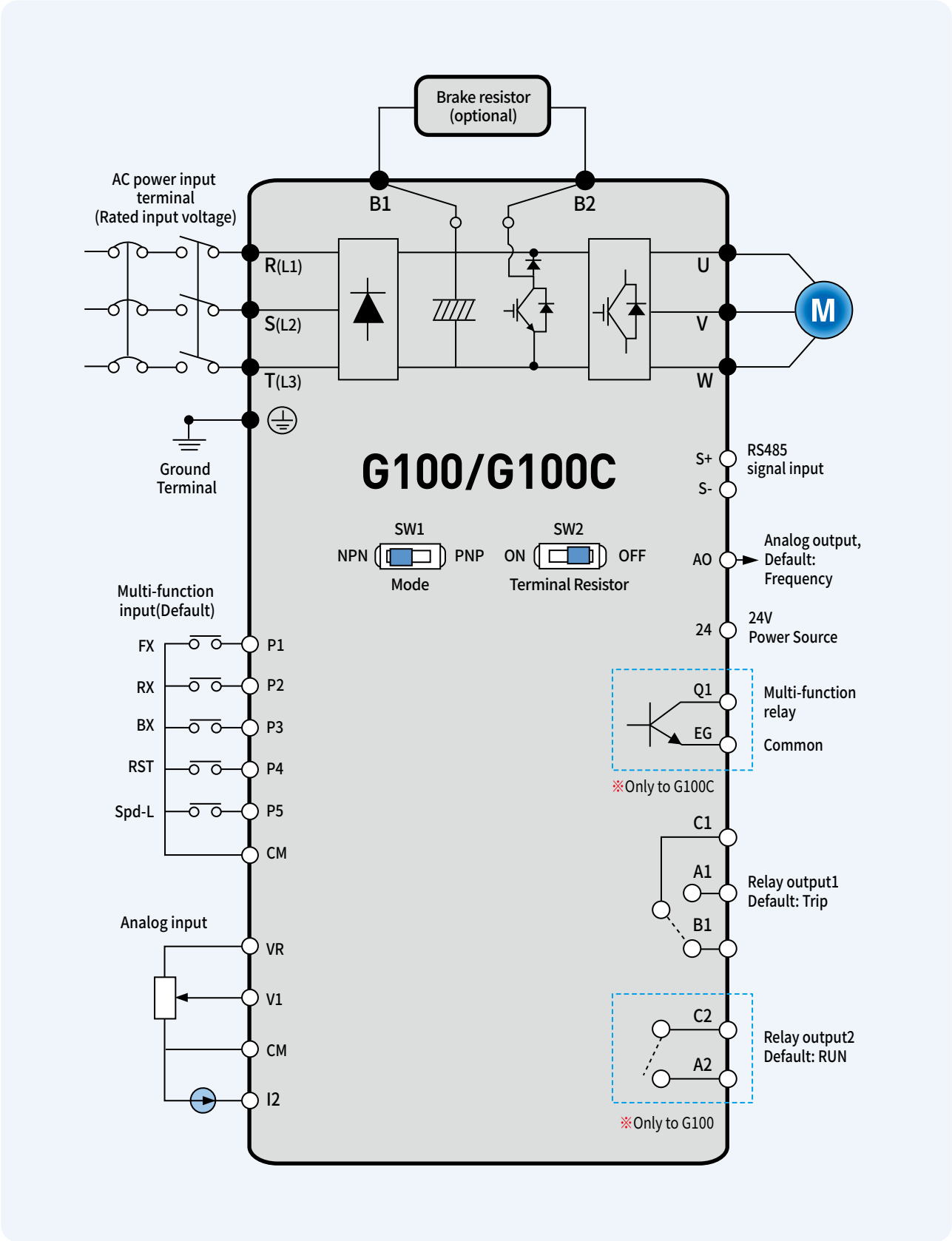

Wiring

11.0~22.0kW

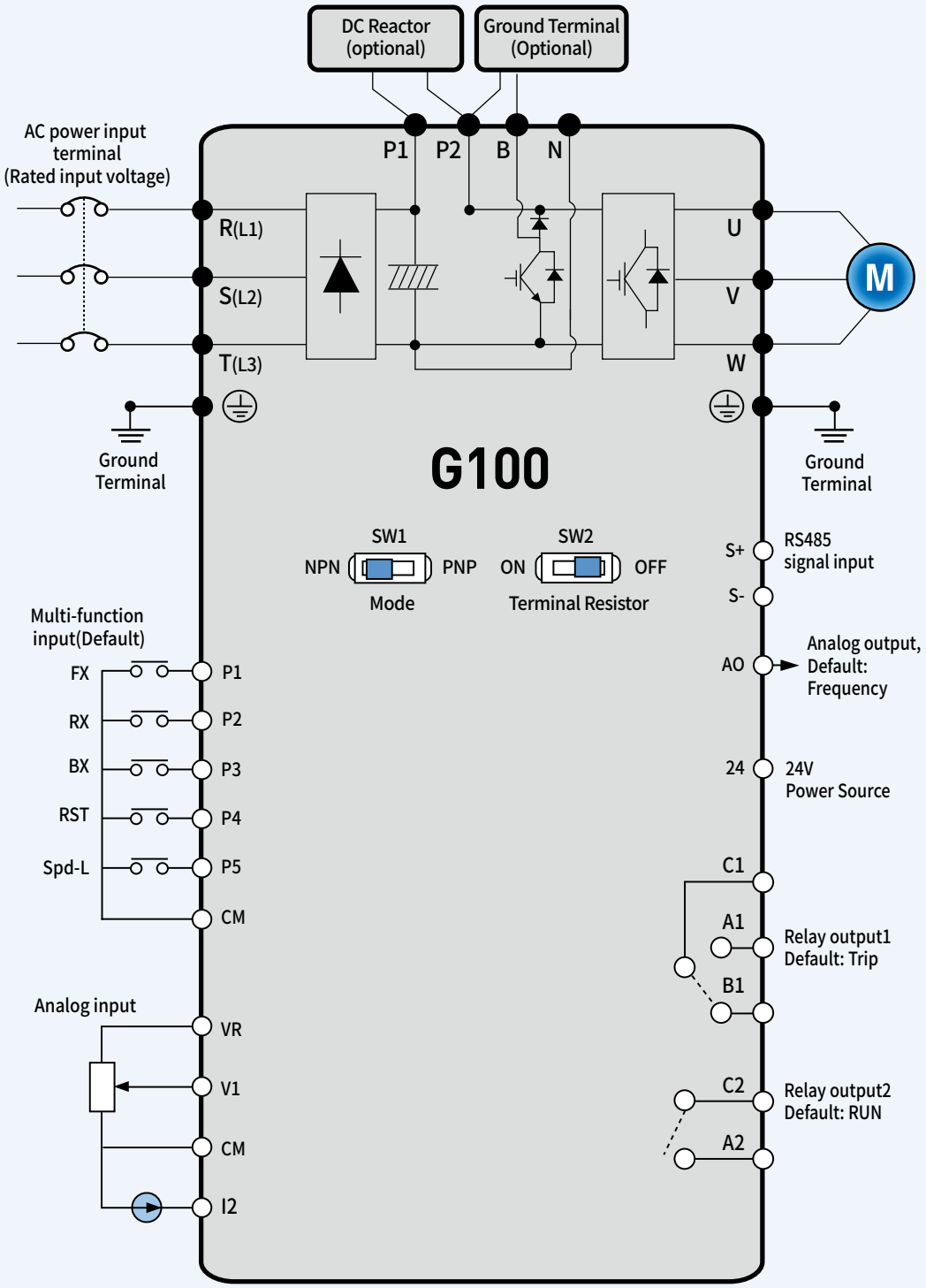

Power Terminal

G100	
0.4kW ~ 2.2kW	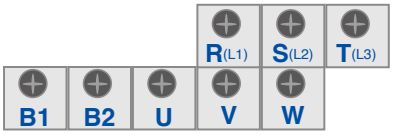
4kW	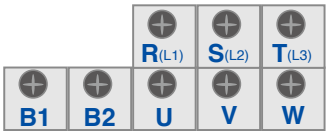
5.5kW ~ 7.5kW	
11kW ~ 22kW	
G100C	
0.4kW ~ 2.2kW	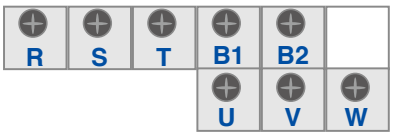

Terminal Labels	Name	Description
⏚	Ground terminal	Connect earth grounding.
R(L1)/S(L2)/T(L3)	AC power input terminal	Mains supply AC power connections.
B1/B2	Brake resistor terminals	Brake resistor wiring connection.
U/V/W	Motor output terminals	3-phase induction motor wiring connections.

Capacity (kW)		Terminal Screw Size	Rated Screw Torque (Kgfcm/Nm)
3-Phase 200V Class	0.4	R/S/T, U/V/W : M3	R/S/T, U/V/W : 5.1/0.5
	0.75		
	1.5	R/S/T, U/V/W : M4	R/S/T, U/V/W : 12.1/1.2
	2.2		
	4	R/S/T, U/V/W : M4	R/S/T, U/V/W : 18.4/1.8
	5.5	R/S/T : M5 U/V/W : M4 (Ground : M3)	R/S/T : 24.0/2.4 U/V/W : 15.0/1.5 (Ground : 5.1/0.5)
	7.5		
	11	R/S/T, U/V/W : M5	R/S/T, U/V/W : 25.34/2.5
	15		
	18.5	R/S/T, U/V/W : M6	R/S/T, U/V/W : 30.5/3
	22		

Capacity (kW)		Terminal Screw Size	Rated Screw Torque (Kgfcm/Nm)
3-Phase 400V Class	0.4	R/S/T, U/V/W : M3.5	R/S/T, U/V/W : 10.3/1.0
	0.75		
	1.5		
	2.2		
	4	R/S/T, U/V/W : M4	R/S/T, U/V/W : 18.4/1.8
	5.5	R/S/T, U/V/W : M4 (Ground : M3)	R/S/T : 14.3/1.4 U/V/W : 18.4/1.8 (Ground : 5.1 /0.5)
	7.5		
	11	R/S/T, U/V/W : M5	R/S/T, U/V/W : 25.34/2.5
	15		
	18.5		
	22		

- Only use the specified torque on the screw heads otherwise damage could occur. Loose screws can cause overheating and damage.
- Use copper wires with 600V, 75°C specification.

Cable selection

Ground Cable and Power Cable Specifications

Load (kW)		Ground Wire		Input/Output Power Wire				Terminal Block Size
		mm²	AWG	mm²		AWG		
				R/S/T	U/V/W	R/S/T	U/V/W	
3-Phase 200V	0.4	4	12	1.5	1.5	16	16	M3(M3 .5*)
	0.75							
	1.5	4	12	4	2.5	12	14	M4(M3.5*)
	2.2	4	12	4	2.5	12	14	M4
	4	6	10	6	6	10	10	M4
	5.5	6	10	16	10	6	8	M4
	7.5							
	11	14	6	16	16	6	6	M5
	15			25	25	4	4	
	18.5			35	25	2	4	M6
	22			35	35	2	2	
3-Phase 400V	0.4	2.5	14	1.5	1.5	16	16	M3.5
	0.75							
	1.5							
	2.2							
	4	6	10	2.5	2.5	14	14	M4
	5.5	6	10	10	6	8	10	M4
	7.5							
	11	14	6	10	10	8	8	M5
	15			10	10	8	8	
	18.5			16	10	6	8	
	22			25	10	4	6	

※ G100C
※ Caution
- Wherever possible use cables with the largest cross-sectional area for mains power wiring, to ensure that voltage drop does not exceed 2%.
- Use copper cables rated for 600 V, 75°C for power terminal wiring.
- Use copper cables rated for 300 V, 75°C for control terminal wiring.

Signal (Control) Cable Specifications

Terminals	Control Terminal Wiring			
	Without Crimp Terminal Connectors		With Crimp Terminal Connectors	
	mm²	AWG	mm²	AWG
24/P1~P5/CM	0.8	18	0.5	20
A1/B1/C1/A2/C2, VR/V1/I2/AO/CM, Q1/EG*/S+/S-				

※ G100C series models support Q1/EG open collector output terminal as a substitute for A2/C2 relay terminal 2.

Control Terminal

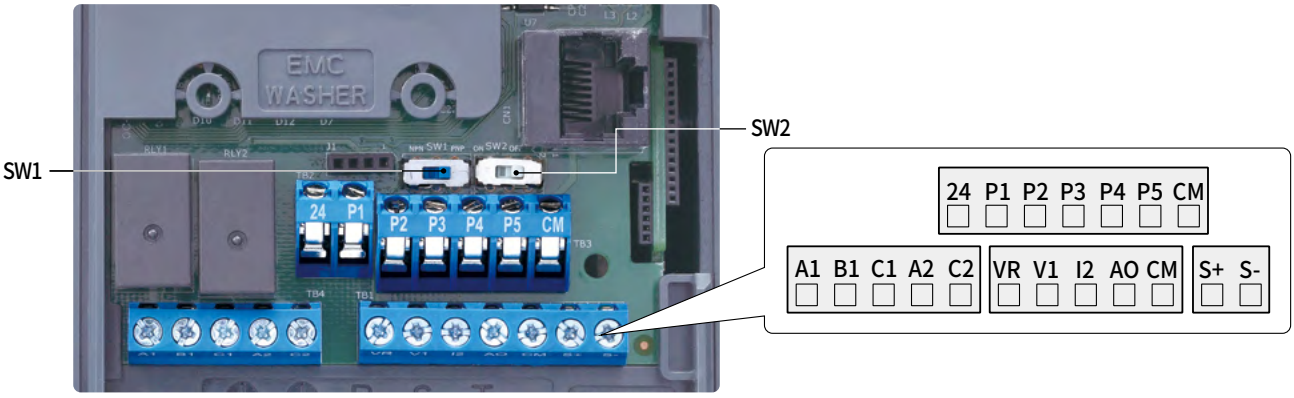

Terminals	Terminal Screw Size	Screw Torque (Kgf cm/Nm)
P1~P5/CM/VR/V1/I2/AO/24/S+/S-	M2	2.2~2.5/0.22~0.25
A1/B1/C1, A2/C2	M2.6	4.0/0.4

• Only use the specified torque on the screw heads otherwise damage could occur.
Loose screws can cause overheating and damage.

Control Board Switches and Connecto

Switch	Description
SW1	NPN/PNP mode selection switch
SW2	Terminating Resistor selection switch
RJ45 Port	Connect to Remote I/O or smart copier, connect with RS485 communication

Category	Terminal Labels	Name	Description
Multi-function Terminal Configuration	P1~P5	Multi-function Input 1-5	Configurable for multi-function input terminals. Factory default terminals and setup are as follows. • P1: Fx • P2: Rx • P3: BX • P4: RST • P5: Speed-L
	CM	Sequence common terminal	Common terminal for analog terminal inputs and outputs.
Analog Input	VR	Potentiometer frequency reference input	Used to setup or modify a frequency reference via analog voltage or current input. • Maximum voltage output: 12 V • Maximum current output: 100mA • Potentiometer: 1~5 kΩ
	V1	Voltage input for frequency reference input	Used to setup or modify a frequency reference via analog voltage input terminal. • Unipolar: 0–10V (12V Max.) • Bipolar: -10–10V (±12V Max.)
	I2	Current input for frequency reference input terminal	Used to setup or modify a frequency reference via current input terminal. • Input current: 4-20 mA • Maximum Input current: 24mA • Input resistance: 249 Ω
Analog Output	AO	Voltage output terminal	Used to send inverter output information to external devices: Output frequency, output current, output voltage, or a DC voltage. • Output voltage: 0–10 V • Maximum output voltage/Current: 12 V, 10 mA • Factory default output: Frequency
	24	External 24V power source	Maximum current output: 100mA
	A1/C1/B1	Fault signal output 1	Sends out alarm signals when the inverter's safety features are activated (AC 250V 1A, DC 30V 1A). • Fault condition: A1 and C1 contacts are connected (B1 and C1 open connection) • Normal operation: B1 and C1 contacts are connected (A1 and C1 open connection)
	A2/C2	Fault signal output 2	Sends out alarm signals when the inverter's safety features are activated (AC 250V 1A, DC 30V 1A). • Fault condition: A2 and C2 contacts are connected • Normal operation: A2 and C2 contacts are open connection
RS-485 Communication	S+/S-	RS-485 signal line	Used to send or receive RS-485 signals.

Keypad Functions

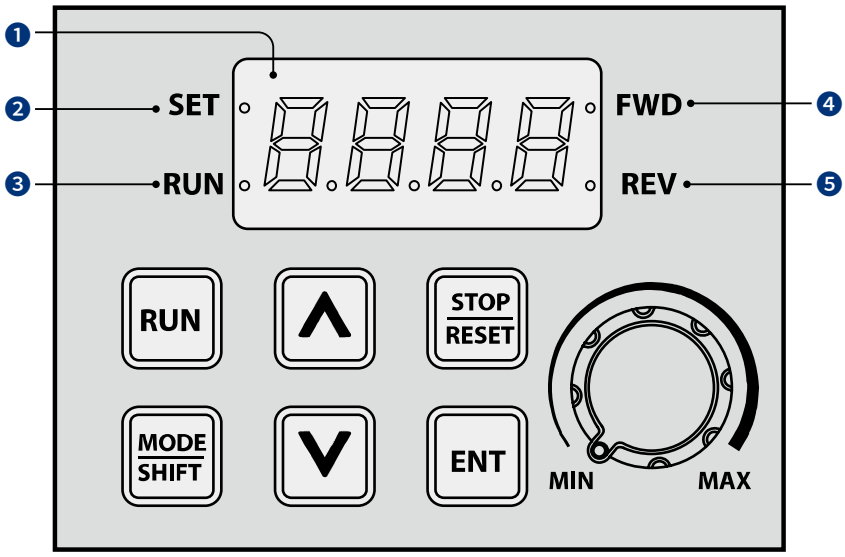

No.	Name	Function
1	7-Segment Display	Displays current operational status and parameter information.
2	SET Indicator	LED flashes during parameter configuration and when the ESC key operates as the multi-function key.
3	RUN Indicator	LED turns on (Steady) during an operation, and flashes during acceleration or deceleration.
4	FWD Indicator	LED turns on (Steady) during forward operation.
5	REV Indicator	LED turns on (Steady) during reverse operation.

Key	Name	Function
RUN	[RUN] Key	Used to run the inverter (Inputs a RUN command).
STOP RESET	[STOP/RESET] Key	STOP: Stops the inverter. RESET: Resets the inverter if a fault or failure occurs.
▲ ▼	[▲] Key, [▼] Key	Switches between codes, or increases or decreases parameter values.
MODE SHIFT	[MODE/SHIFT] Key	Moves between groups or moves to the digit on the left when setting the parameter. Press the MODE/SHIFT key once again on the maximum number of digits to move to the minimum number of digits.
ENT	[ENTER] Key	Switches from the selected state of parameter to the input state. Edits parameter and apply change. Accesses the operation information screen during failure on the failure screen.
MIN MAX	[VOLUME]	Used to set the operation frequency.

※ Operates as ESC key if two keys out of [MODE/SHIFT] key, [▲]key and [▼]key are entered at the same time.
- Press ESC in the group navigation mode to go to the initial screen (the frequency display screen).
- Press ESC in the mode to change parameter to go to group navigation mode without saving.

Group	Keypad Display	Description
Operation	-	Configures basic parameters for inverter operation.
Drive	dr	Configures parameters for basic operations. These include jog operation, motor capacity evaluation, torque boost, and other keypad related parameters.
Basic	bA	Configures basic operation parameters. These parameters include motor parameters and multi-step frequency parameters.
Advanced	Ad	Configures acceleration or deceleration patterns, frequency limits, etc.
Control	Cn	Configures sensorless vector-related features.
Input Terminal	In	Configures input terminal-related features, including digital multi-functional inputs and analog inputs.
Output Terminal	OU	Configures output terminal-related features such as relays and analog outputs.
Communication	Cm	Configures communication features for RS-485 or other communication options.
Application	AP	Configures functions related to PID control.
Protection	Pr	Configures motor and inverter protection features
Motor 2 (Secondary Motor)	m2	Configures secondary motor related features. The secondary motor (M2) group appears on the keypad only when one of the multi-function input terminals (In.65-In.69) has been set to 26 (Secondary motor).

Group & Code selection

Step	Instruction	Keypad Display
1	Move to the group you want using the [MODE] keys. Press the [MODE] key for longer than 1 second to move in the opposite direction.	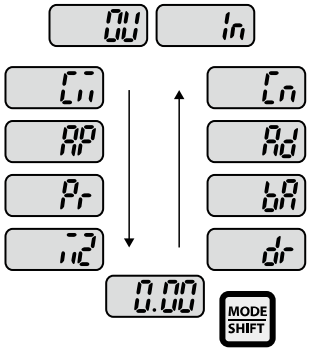
2	Move up and down through the codes using the [▲] and [▼] keys until you locate the code that you require.	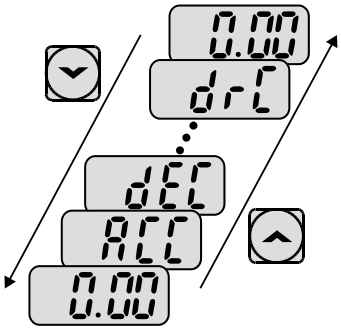
3	Press the [ENT] key to save the change.	-

When moving up and down through the codes using the [▲] and [▼] keys in each group, there are cases where the code number does not increase or decrease.
This is because the number was left blank in the inverter program by expecting additional features or the program was set up to not display the unused features.

Navigating Directly to Different Codes

The following example details navigating to code dr. 95, from the initial code in the drive group (dr. 0).
This example applies to all groups whenever you would like to navigate to a specific code number.

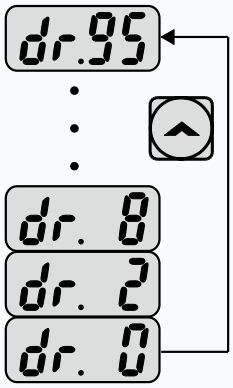

Step	Instruction	Keypad Display
1	Ensure that you are currently at the first code of the drive group (dr.0).	dr.0
2	Press the [ENT] key. Number "9" will flash.	9
3	Press the [▼] key and change the ones' place of the code "95" to "5."	5
4	Press the [MODE] to move to the tens' place. The cursor will move to the left and "05" will be displayed. At this time, the number "0" will be flashing.	05
5	Press the [▲] key to change the tens' place number from "0" to "9," so the designated code is "95."	95
6	Press the [ENT] key. Code dr.95 is displayed.	dr.95

Fault Trips

Protection functions for output current and input voltage

Keypad Display	Name	Type	Description
OLt	Over Load	Latch	Displayed when the motor overload trip is activated and the actual load level exceeds the set level. Operates when Pr.20 is set to a value other than 0.
uLt	Under Load	Latch	Displayed when the motor underload trip is activated and the actual load level is less than the set level. Operates when Pr.27 is set to a value other than 0.
OCt	Over Current 1	Latch	Displayed when inverter output current exceeds 200% of the rated current.
Out	Over Voltage	Latch	Displayed when internal DC circuit voltage exceeds the specified value.
Lut	Low Voltage	Level	Displayed when internal DC circuit voltage is less than the specified value.
Lu2	Low Voltage 2	Latch	Displayed when internal DC circuit voltage is less than the specified value during inverter operation. Operates when Pr.82 is set to 1.
GFt	Ground Trip*	Latch	Displayed when a ground fault trip occurs on the output side of the inverter and causes the current to exceed the specified value. The specified value varies depending on inverter capacity.
Eth	E-Thermal	Latch	Displayed based on inverse time-limit thermal characteristics to prevent motor overheating. Operates when Pr.40 is set to a value other than 0.
POt	Out Phase Open	Latch	Displayed when a 3-phase inverter output has one or more phases in an open circuit condition. Operates when bit 1 of Pr.05 is set to 1.
IPO	In Phase Open	Latch	Displayed when a 3-phase inverter input has one or more phases in an open circuit condition. Operates only when bit 2 of Pr.05 is set to 1.
IOL	Inverter OLT	Latch	Displayed when the inverter has been protected from overload and resultant overheating, based on inverse time-limit thermal characteristics. Allowable overload rates for the inverter are 150% for 1 min and 200% for 4 sec. Protection is based on inverter rated capacity, and may vary depending on the device's capacity.
nmt	No Motor Trip	Latch	Displayed when the motor is not connected during inverter operation. Operates when Pr.31 is set to 1.
rOt	Relay Open Trip	Latch	Occurs when the DC voltage relay is not operating when power the is input. The Pr-90 code must be set to 1 to operate.
Otd1	Over Torque Trip 1	Latch	Occurs when the output current is higher than the level set in Ou-68. Operates when OU-67 is set to 3, 4.
Otd2	Over Torque Trip 2	Latch	Occurs when the output current is higher than the level set in OU-71. Operates when OU-70 is set to 3, 4.
Utd1	Under Torque Trip 1	Latch	Occurs when the output current is lower than the level set in OU-68. Operates when OU-67 is set to 7, 8.
Utd2	Under Torque Trip 2	Latch	Occurs when the output current is lower than the level set in OU-71. Operates when OU-70 is set to 7, 8.

* Ground Trip (GFT) feature is not provided in the products under 4.0 kW. Over current trip (OCT) or over voltage trip (OVT) may occur during low resistance grounding.

Fault Trips

Protection functions using abnormal internal circuit conditions and external signals

Keypad Display	Name	Type	Description
OHt	Over Heat	Latch	Displayed when the temperature of the inverter heat sink exceeds the specified value.
OC2	Over Current 2	Latch	Displayed when the DC circuit in the inverter detects a specified level of excessive, short circuit current.
EXt	External Trip	Latch	Displayed when an external fault signal is provided by the multi-function terminal. Set one of the multi-function input terminals at In.65-69 to 4 (External trip) to enable external trip.
bX	BX	Level	Displayed when the inverter output is blocked by a signal provided from the multi-function terminal. Set one of the multi-function input terminals at In. 65-69 to 5 (BX) to enable input block function.
H"t	H/W-Diag	Fatal	Displayed when an error is detected in the memory (EEPRom), analog-digital converter output (ADC Off Set), or CPU watchdog (Watch Dog-1, Watch Dog-2). • EEP Err: An error in reading/Writing parameters due to keypad or memory (EEPRom) fault. • ADC Off Set: An error in the current sensing circuit (U/V/W terminal, current sensor, etc.).
ntC	NTC Open	Latch	Displayed when an error is detected in the temperature sensor of the insulated Gate Bipolar Transistor (IGBT).
FAn	Fan Trip	Latch	Displayed when an error is detected in the cooling fan. Set Pr.79 to 0 to activate fan trip (for models below 22kW capacity).
PId	Pre-PID Fail	Latch	Displayed when pre-PID is operating with functions set at AP.34–AP.36. A fault trip occurs when a controlled variable (PID feedback) is measured below the set value and the low feedback continues, as it is treated as a load fault.
Xbr	Ext-Brake	Latch	Operates when the external brake signal is provided by the multi-function terminal. Occurs when the inverter output starting current remains below the set value at Ad.41. Set either OU.31 or OU.32 to 35 (BR Control).
OH	Overheat Pre Alarm	Latch	When the user has set Pr-78 to 2: Free-Run or 3: Dec, pre-overheating warning trip of inverter occurs if the inverter temperature exceeds the temperature set by the user in Pr-77.

Protection functions for communication options

Keypad Display	Name	Type	Description
LOr	Lost Command	Level	Displayed when a frequency or operation command error is detected during inverter operation by controllers other than the keypad (e.g., using a terminal block and a communication mode). Operates when Pr.12 is set to a value other than 0.
IOt XOId	IO Board Trip	Latch	Displayed when the I/O board or external communication card is not connected to the inverter or there is a bad connection.
ErrC			Displayed when the XOId error code continues for more than 5 sec. ('Errc' -> '-rrc' -> 'E-rc' -> 'Er-c' -> 'Err-' -> '- -rc' -> 'Er- -' -> '- - - -' -> 'Errc' -> ⋯)
OPt	Option Trip -1	Latch	Displayed when a communication error is detected between the inverter and the communication board. Occurs when the communication option card is installed.

Warning Messages

Keypad Display	Name	Description
OL'	Over Load	Displayed when the motor is overloaded. Operates when Pr.17 is set to 1. To operate, select 5. Set the digital output terminal or relay (OU.31 or OU.33) to 5 (Over load) to receive overload warning output signals.
UL'	Under Load	Displayed when the motor is underloaded. Operates when Pr.25 is set to 1. Set the digital output terminal or relay (OU.31 or OU.33) to 7 (Under load) to receive underload warning output signals.
IOL'	INV Over Load	Displayed when the overload time equivalent to 60 % of the inverter overheat protection (inverter IOLT) level, is accumulated. Set the digital output terminal or relay (OU.31 or OU.33) to 6 (IOL) to receive inverter overload warning output signals.
LC'	Lost Command	Lost command warning alarm occurs even with Pr.12 set to 0. The warning alarm occurs based on the condition set at Pr.13- 15. Set the digital output terminal or relay (OU.31 or OU.33) to 13 (Lost command) to receive lost command warning output signals. If the communication settings and status are not suitable for P2P, a lost command alarm occurs.
EFAn	Fan Exchange	An alarm occurs when the value set at PRT-86 is less than the value set at PRT-87. To receive fan exchange output signals, set the digital output terminal or relay (OUT-31 or OUT-33) to 38 (Fan exchange).
FAn'	Fan Warning	Displayed when an error is detected from the cooling fan while Pr.79 is set to 1. Set the digital output terminal or relay (OU.31 or OU.33) to 8 (Fan warning) to receive fan warning output signals.
db'	DB Warn %ED	Displayed when the DB resistor usage rate exceeds the set value. Set the detection level at Pr.66.
trEr	Retry Tr Tune	Operates when dr.9 is set to 4. The warning alarm occurs when the motor's rotor time constant (Tr) is either too low or too high.
OH	Overheat Pre Alarm	When the user has set Pr-78 to 1: Warning, pre-overheating warning of inverter occurs if the inverter temperature exceeds the temperature set by the user in Pr-77.

Peripheral Devices

Braking Resistor Specification

Capacity(kW)		Resistance(Ω)	Rated Capacity(W)
3-Phase 200V Class	0.4	300	100
	0.75	150	150
	1.5	60	300
	2.2	50	400
	3.7	33	600
	4	33	600
	5.5	20	800
	7.5	15	1200
	11	10	2400
	15	8	2400
	18.5	5	3600
	22	5	3600

Capacity(kW)		Resistance(Ω)	Rated Capacity(W)
3-Phase 400V Class	0.4	1200	100
	0.75	600	150
	1.5	300	300
	2.2	200	400
	3.7	130	600
	4	130	600
	5.5	85	1000
	7.5	60	1200
	11	40	2000
	15	30	2400
	18.5	20	3600
	22	20	3600

* The standard for braking torque is 150% and the working rate (%ED) is 5%. If the working rate is 10%, the rated capacity for braking resistance must be calculated at twice the standard.

Compatible Circuit Breaker, Leakage Breaker and Magnetic Contactor Models (Manufactured by LS)

Capacity(kW)		Circuit Breaker			Leakage Breaker		Magnetic Contactor	
		Model	Current(A)	Specific Model Name	Model	Current(A)	Model	Current(A)
3-Phase 200V Class	0.4	UTE100H	15	UTE100·H·FTU·15·3P·UL	EBS33c	5	MC-6a	9
	0.75					10	MC-9a, MC-9b	11
	1.5					15	MC-18a, MC-18b	18
	2.2		20	UTE100·H·FTU·20·3P·UL		20	MC-22b	22
	4.0		30	UTE100·H·FTU·30·3P·UL		30	MC-32a	32
	5.5	UTS150H	50	UTS150·H·FTU·50·3P·UL	EBS53c	50	MC-50a	55
	7.5		60	UTS150·H·FTU·60·3P·UL	EBS63c	60	MC-65a	65
	11		80	UTS150·H·FTU·80·3P·LL·UL	EBS103c	100	MC-85a	85
	15		100	UTS150·H·FTU·100·3P·LL·UL		125	MC-130a	130
	18.5		125	UTS150·H·FTU·125·3P·LL·UL	EBS203c	150	MC-150a	150
	22		150	UTS150·H·FTU·150·3P·LL·UL		170	MC-180a	185
3-Phase 400V Class	0.4	UTE100E	15	UTE100·E·FTU·15·3P·UL	EBS33c	5	MC-6a	7
	0.75						MC-6a	
	1.5					10	MC-9a, MC-9b	9
	2.2						MC-12a, MC-12b	12
	4.0		20	UTE100·E·FTU·20·3P·UL		20	MC-18a, MC-18b	18
	5.5		30	UTE100·E·FTU·30·3P·UL		30	MC-22b	22
	7.5						MC-32a	32
	11	UTS150L	50	UTS150·L·FTU·50·3P·LL·UL	EBS53c	50	MC-50a	50
	15		60	UTS150·L·FTU·60·3P·LL·UL	EBS63c	60	MC-65a	65
	18.5		70	UTS150·L·FTU·70·3P·LL·UL	EBS103c	75	MC-75a	75
	22		70	UTS150·L·FTU·90·3P·LL·UL		100	MC-85a	85

Fuse and Reactor Specifications

Capacity (kW)		AC Input Fuse			AC Reactor	
		Model	Current (A)	Voltage (V)	Inductance (mH)	Current (A)
3-Phase 200V Class	0.4	DFJ-10 1)	10	600	1.20	10
	0.75					
	1.5	DFJ-15	15		0.88	14
	2.2	DFJ-20	20		0.56	20
	4.0	DFJ-30	30		0.39	30
	5.5	DFJ-50	50		0.30	34
	7.5	DFJ-60	60		0.22	45
	11	DFJ-80	80		0.16	64
	15	DFJ-100	100		0.13	79
	18.5	DFJ-110	110		0.12	96
	22	DFJ-125	125		0.1	112
3-Phase 400V Class	0.4	DFJ-10	10		4.81	4.8
	0.75					
	1.5				3.23	7.5
	2.2	DFJ-15	15		2.34	10
	4.0	DFJ-20	20		1.22	15
	5.5	DFJ-30	30		1.12	19
	7.5	DFJ-35	35		0.78	27
	11	DFJ-50	50		0.59	35
	15	DFJ-60	60		0.46	44
	18.5	DFJ-70	70		0.40	52
	22	DFJ-100	100		0.30	68

Note1) DFJ is class J / 600V level model name of the bussmann company.

⚠ **Caution** Use class CC, G, J, L, R or T UL listed Input fuse and UL listed breaker only. See the table above for the voltage and current rating of the fuse and the breaker.

Dimensions

0.4 ~ 0.8kW (G100C)

Units: mm [Inches]

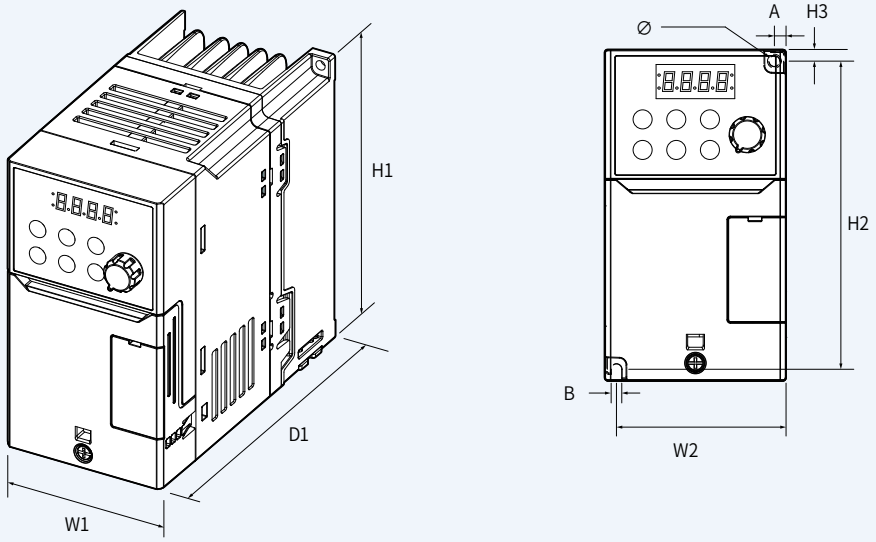

Product (Model)	W1	W2	H1	H2	H3	D1	A	B	Ø
0004G100C-2 0004G100C-4	70 (2.76)	65.5 (2.58)	128 (5.04)	119 (4.69)	4.5 (0.18)	130 (5.11)	4.5 (0.18)	4.5 (0.18)	4.5 (0.18)
0008G100C-2 0008G100C-4	70 (2.76)	65.5 (2.58)	128 (5.04)	119 (4.69)	4.5 (0.18)	135 (5.31)	4.5 (0.18)	4.5 (0.18)	4.5 (0.18)

1.5 ~2.2kW (G100C)

Units: mm [Inches]

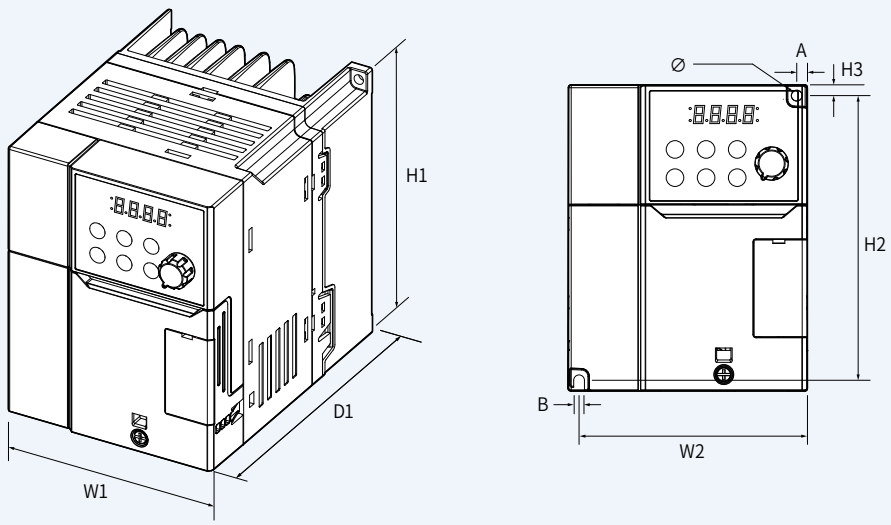

Product (Model)	W1	W2	H1	H2	H3	D1	A	B	Ø
0015G100C-2 0015G100C-4	100 (3.93)	95.5 (3.76)	128 (5.04)	119 (4.69)	4.5 (0.18)	135 (5.31)	4.5 (0.18)	4.5 (0.18)	4.5 (0.18)
0022G100C-2 0022G100C-4	100 (3.93)	95.5 (3.76)	128 (5.04)	119 (4.69)	4.5 (0.18)	135 (5.31)	4.5 (0.18)	4.5 (0.18)	4.5 (0.18)

4.0kW (G100C)

Units: mm [Inches]

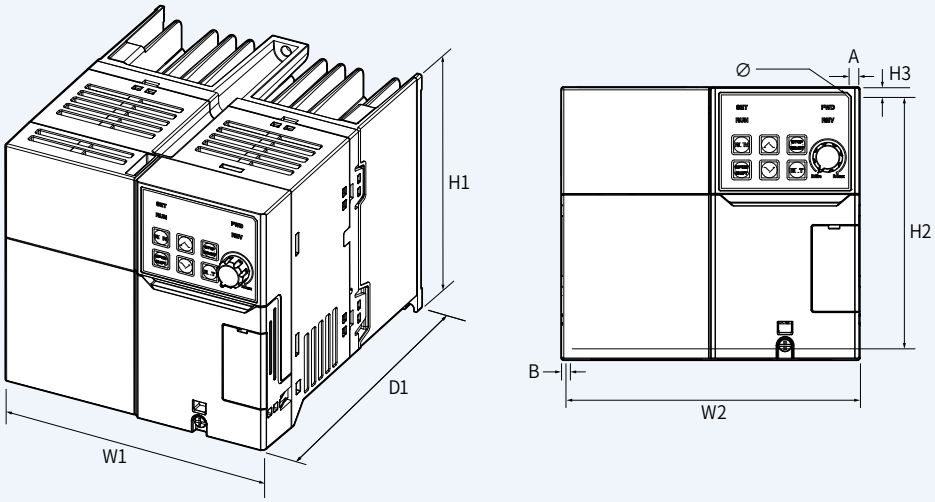

Product (Model)	W1	W2	H1	H2	H3	D1	A	B	Ø
0040G100-2 0040G100-4	140 (5.51)	132 (5.20)	128 (5.04)	120.5 (4.74)	5 (0.20)	155 (6.10)	-	4.5 (0.18)	4.5 (0.18)

0.4 ~ 0.8kW

Units: mm [Inches]

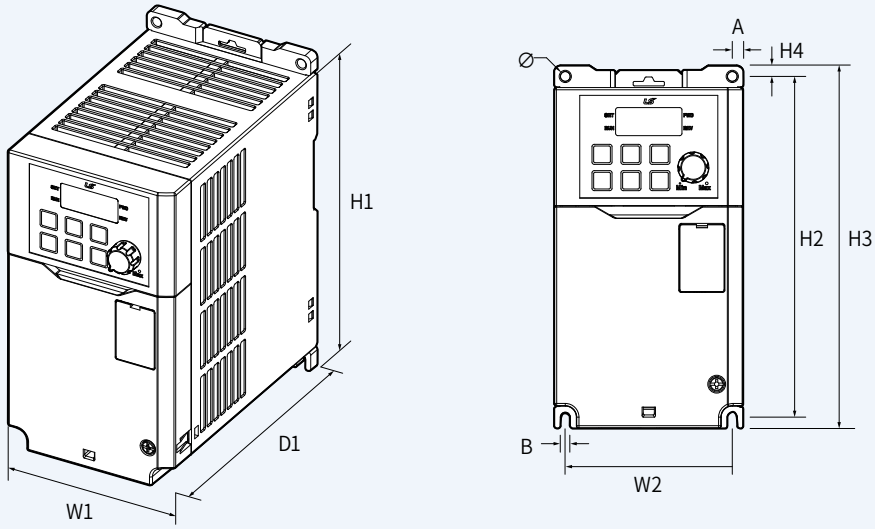

Product (Model)	W1	W2	H1	H2	H3	H4	D1	A	B	Ø
0004G100-2 0004G100-4	86.2 (3.39)	76.2 (3.00)	154 (6.06)	154 (6.06)	164 (6.46)	5 (0.20)	131.5 (5.18)	5 (0.20)	4.5 (0.18)	4.5 (0.18)
0008G100-2 0008G100-4	86.2 (3.39)	76.2 (3.00)	154 (6.06)	154 (6.06)	164 (6.46)	5 (0.20)	131.5 (5.18)	5 (0.20)	4.5 (0.18)	4.5 (0.18)

Dimensions

1.5 ~ 2.2kW

Units: mm [Inches]

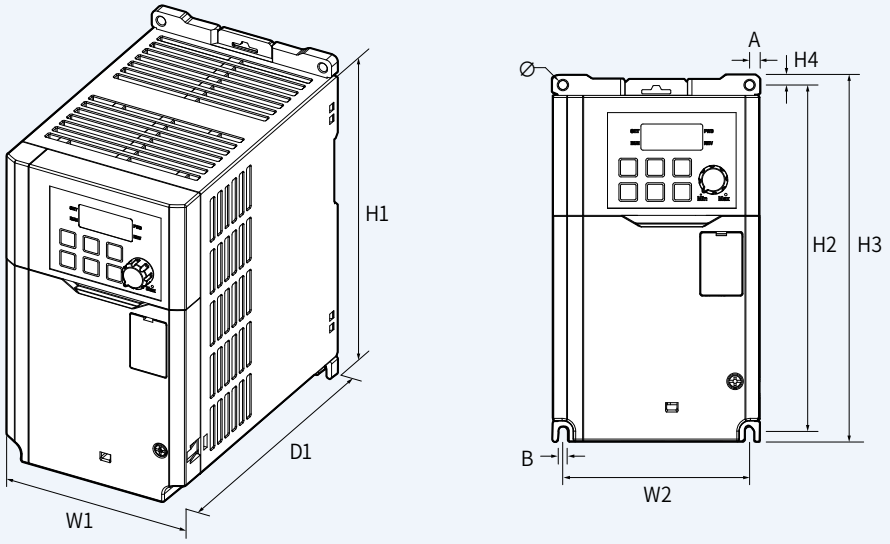

Product (Model)	W1	W2	H1	H2	H3	H4	D1	A	B	Ø
0015G100-2 0015G100-4	101 (3.98)	90 (3.54)	167 (6.57)	167 (6.57)	177 (6.97)	5 (0.20)	150.5 (5.93)	5.5 (0.22)	4.5 (0.18)	4.5 (0.18)
0022G100-2 0022G100-4	101 (3.98)	90 (3.54)	167 (6.57)	167 (6.57)	177 (6.97)	5 (0.20)	150.5 (5.93)	5.5 (0.22)	4.5 (0.18)	4.5 (0.18)

4.0kW

Units: mm [Inches]

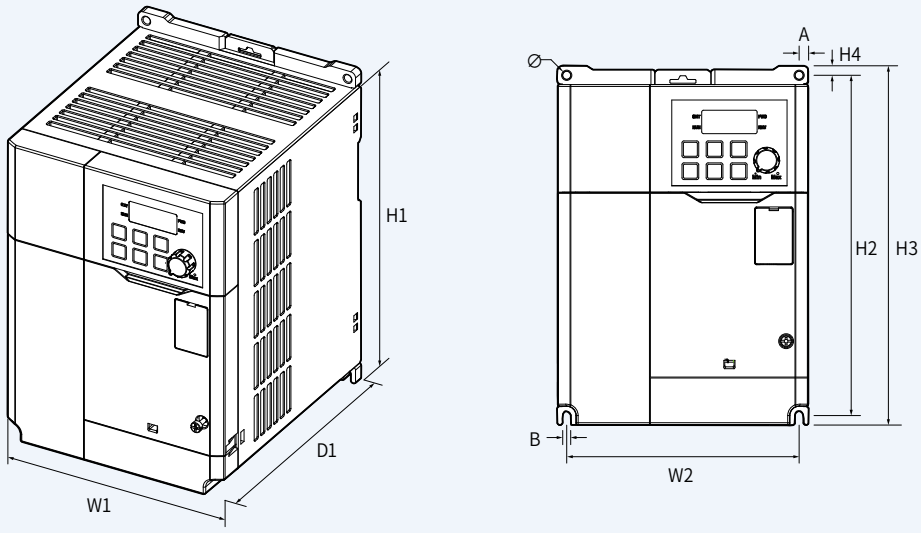

Product (Model)	W1	W2	H1	H2	H3	H4	D1	A	B	Ø
0040G100-2 0040G100-4	135 (5.31)	125 (4.92)	183 (7.20)	183 (7.20)	193 (7.60)	5 (0.20)	150.5 (5.93)	5 (0.20)	4.5 (0.18)	4.5 (0.18)

5.5 ~ 7.5kW

Units: mm [Inches]

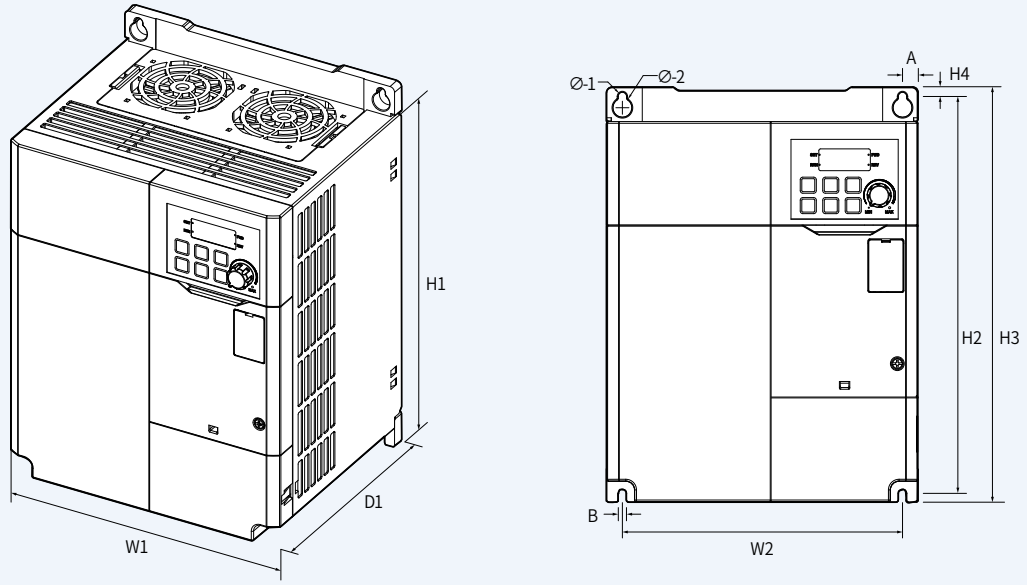

Product (Model)	W1	W2	H1	H2	H3	H4	D1	A	B	Ø
0055G100-2 0055G100-4	180 (7.09)	상부:162(6.38) 하부:170(6.70)	220 (8.66)	229.5 (9.04)	240 (9.45)	5.5 (0.22)	144 (5.67)	상부:9(0.35) 하부:5(0.20)	4.5 (0.18)	Ø-1:4.5(0.18) Ø-2:6(0.24)
0075G100-2 0075G100-4	180 (7.09)	상부:162(6.38) 하부:170(6.70	220 (8.66)	229.5 (9.04)	240 (9.45)	5.5 (0.22)	144 (5.67)	상부:9(0.35) 하부:5(0.20)	4.5 (0.18)	Ø-1:4.5(0.18) Ø-2:9(0.36)

11kW-2, 11~15kW-4

Units: mm [Inches]

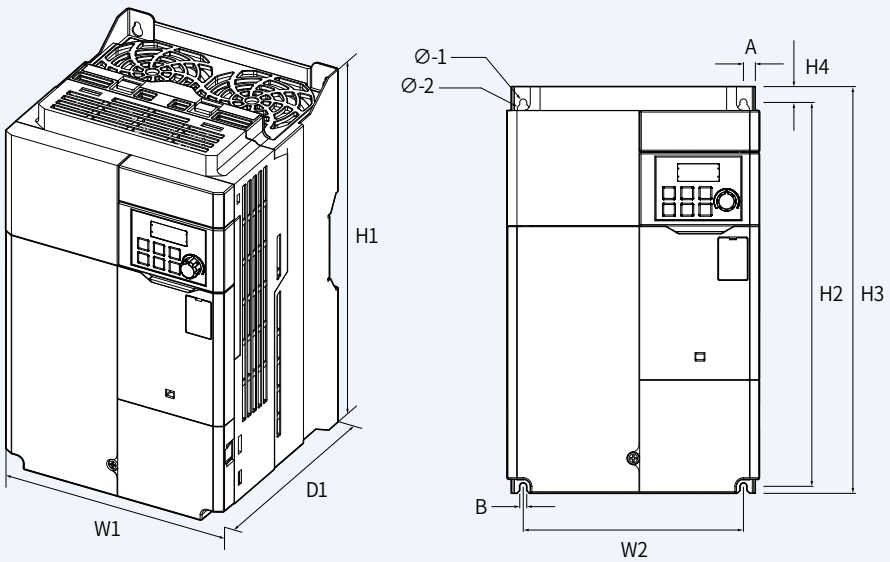

Product (Model)	W1	W2	H1	H2	H3	H4	D1	A	B	Ø
0110G100-2 0110G100-4 0150G100-4	180 (7.09)	157 (6.18)	290 (11.4)	273.7 (10.8)	290 (11.4)	11.3 (0.44)	173 (6.81)	8.5 (0.33)	4.5 (0.18)	Ø-1:4.5(0.18) Ø-2:8.5(0.33)

Dimensions

15kW-2, 18.5~22kW-4

Units: mm [Inches]

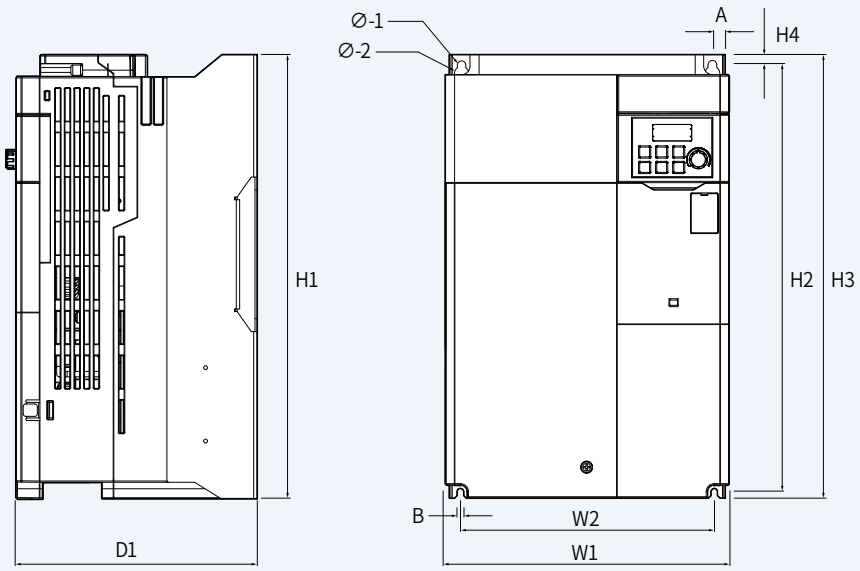

Product (Model)	W1	W2	H1	H2	H3	H4	D1	A	B	Ø
0150G100-2 0185G100-4 0220G100-4	220 (8.66)	193.8 (7.63)	345 (13.6)	331 (13.0)	345 (13.6)	8 (0.31)	187 (7.36)	10.1 (0.40)	5.5 (0.22)	Ø-1:5.5(0.22) Ø-2:11(0.43)

18.5 ~ 22kW-2

Units: mm [Inches]

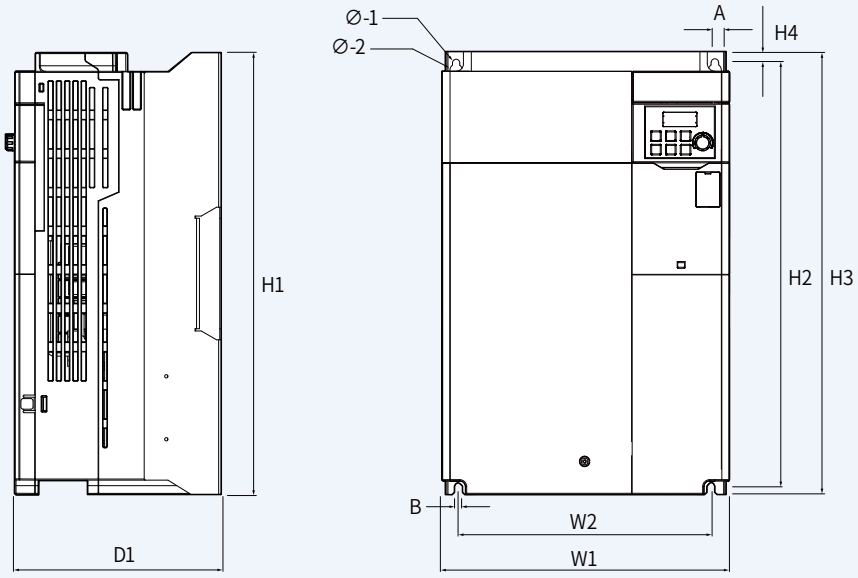

Product (Model)	W1	W2	H1	H2	H3	H4	D1	A	B	Ø
0185G100-2 0220G100-2	260 (10.2)	229.8 (9.05)	400 (15.7)	386 (15.2)	400 (15.7)	8 (0.31)	187 (7.36)	11.4 (0.45)	6.6 (0.26)	Ø-1:6(0.26) Ø-2:13.5(0.53)

Dimensions

Conduit

Units: mm [Inches]

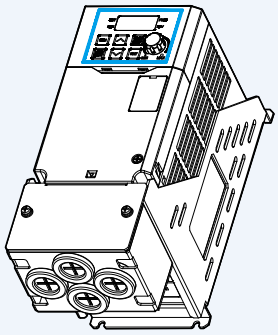

Drive + Conduit

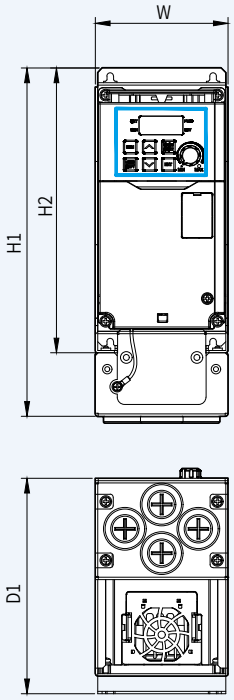

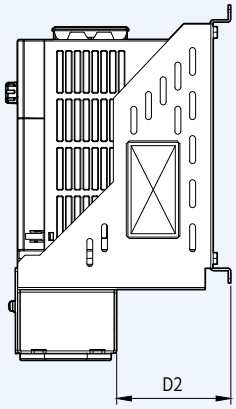

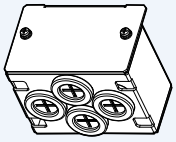

Conduit

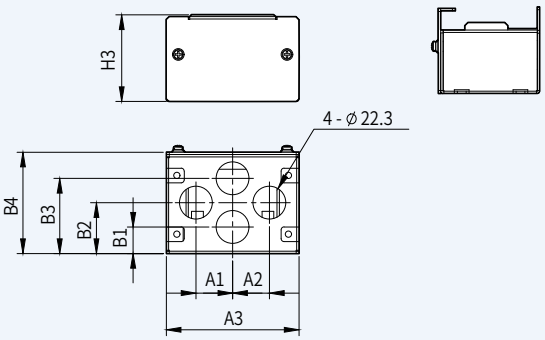

* Without rubber packing

Product (Model)			W	H1	H2	H3	D1	D2	A1	A2	A3	B1	B2	B3	B4	C1	C2	Product weight [Kg]	Conduit weight [Kg]
A Frame	3-Phase 200V	LSLV0004G100-2	90.4	237.1	193.9	59	146.7	77.7	25	25	90.4	18	34.6	51.2	69			1.04	1.2
			[3.559]	[9.335]	[7.634]	[2.323]	[5.776]	[3.059]	[0.984]	[0.984]	[3.559]	[0.709]	[1.362]	[2.014]	[2.717]				
		LSLV0008G100-2	90.4	237.1	193.9	59	146.7	77.7	25	25	90.4	18	34.6	51.2	69			1.06	1.2
			[3.559]	[9.335]	[7.634]	[2.323]	[5.776]	[3.059]	[0.984]	[0.984]	[3.559]	[0.709]	[1.362]	[2.014]	[2.717]				
	3-Phase 400V	LSLV0004G100-4	90.4	237.1	193.9	59	146.7	77.7	25	25	90.4	18	34.6	51.2	69			1.02	1.2
			[3.559]	[9.335]	[7.634]	[2.323]	[5.776]	[3.059]	[0.984]	[0.984]	[3.559]	[0.709]	[1.362]	[2.014]	[2.717]				
		LSLV0008G100-4	90.4	237.1	193.9	59	146.7	77.7	25	25	90.4	18	34.6	51.2	69			1.06	1.2
			[3.559]	[9.335]	[7.634]	[2.323]	[5.776]	[3.059]	[0.984]	[0.984]	[3.559]	[0.709]	[1.362]	[2.014]	[2.717]				

Units: mm [Inches]

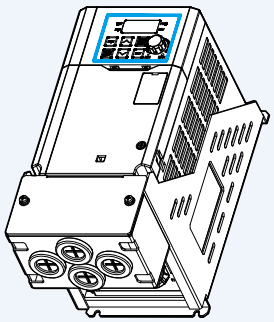

Drive + Conduit

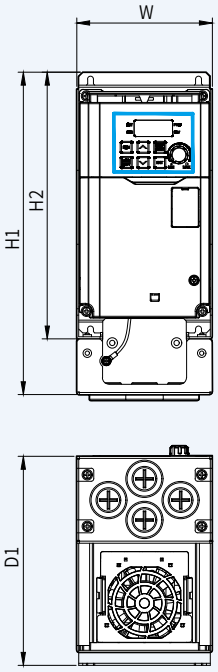

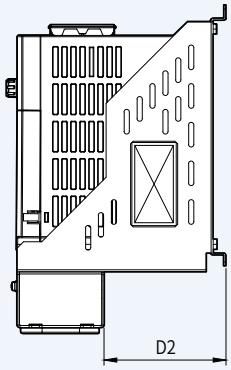

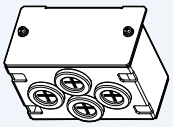

Conduit

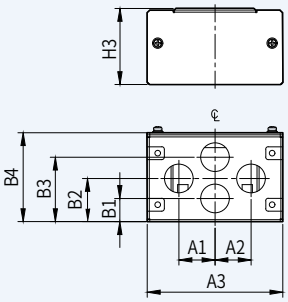

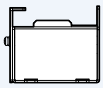

* Without rubber packing

Product (Model)			W	H1	H2	H3	D1	D2	A1	A2	A3	B1	B2	B3	B4	C1	C2	Product weight [Kg]	Conduit weight [Kg]
B Frame	3-Phase 200V	LSLV0015G100-2	105.2	250.1	206.9	59	162.1	94.7	28	28	105.2	18	33.5	50	69			1.36	1.4
			[4.142]	[9.846]	[8.146]	[2.323]	[6.382]	[3.728]	[1.102]	[1.102]	[4.142]	[0.709]	[1.319]	[1.969]	[2.717]				
		LSLV0022G100-2	105.2	250.1	206.9	59	162.1	94.7	28	28	105.2	18	33.5	50	69			1.4	1.4
			[4.142]	[9.846]	[8.146]	[2.323]	[6.382]	[3.728]	[1.102]	[1.102]	[4.142]	[0.709]	[1.319]	[1.969]	[2.717]				
	3-Phase 400V	LSLV0015G100-4	105.2	250.1	206.9	59	162.1	94.7	28	28	105.2	18	33.5	50	69			1.4	1.4
			[4.142]	[9.846]	[8.146]	[2.323]	[6.382]	[3.728]	[1.102]	[1.102]	[4.142]	[0.709]	[1.319]	[1.969]	[2.717]				
		LSLV0022G100-4	105.2	250.1	206.9	59	162.1	94.7	28	28	105.2	18	33.5	50	69			1.42	1.4
			[4.142]	[9.846]	[8.146]	[2.323]	[6.382]	[3.728]	[1.102]	[1.102]	[4.142]	[0.709]	[1.319]	[1.969]	[2.717]				

Dimensions

Conduit

Units: mm [Inches]

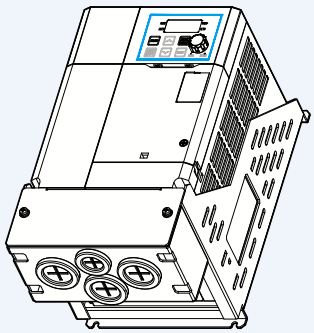

Drive + Conduit

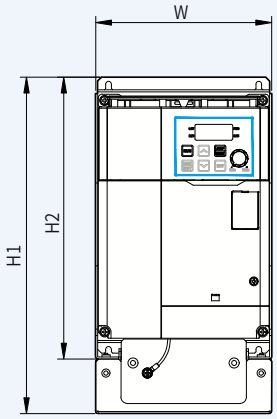

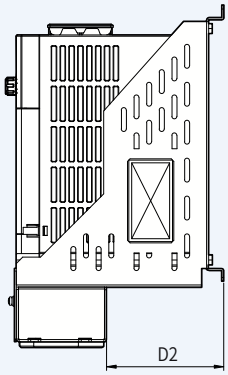

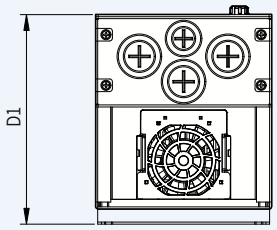

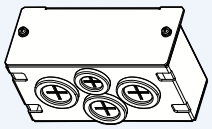

Conduit

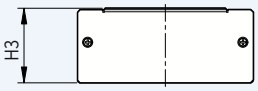

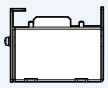

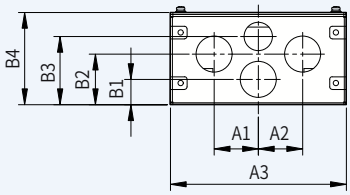

* Without rubber packing

Product (Model)			W	H1	H2	H3	D1	D2	A1	A2	A3	B1	B2	B3	B4	C1	C2	Product weight [Kg]	Conduit weight [Kg]
C Frame	3-Phase 200V	LSLV0040G100-2	139.2	266.1	222.9	59	165.7	92.7	35	35	139.2	20	40	54	73			1.89	1.7
			[5.48]	[10.476]	[8.776]	[2.323]	[6.524]	[3.65]	[1.378]	[1.378]	[5.48]	[0.787]	[1.575]	[2.126]	[2.874]				
	3-Phase 400V	LSLV0040G100-4	139.2	266.1	222.9	59	165.7	92.7	35	35	139.2	20	40	54	73			1.92	1.7
			[5.48]	[10.476]	[8.776]	[2.323]	[6.524]	[3.65]	[1.378]	[1.378]	[5.48]	[0.787]	[1.575]	[2.126]	[2.874]				

Units: mm [Inches]

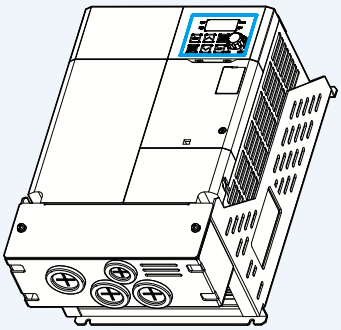

Drive + Conduit

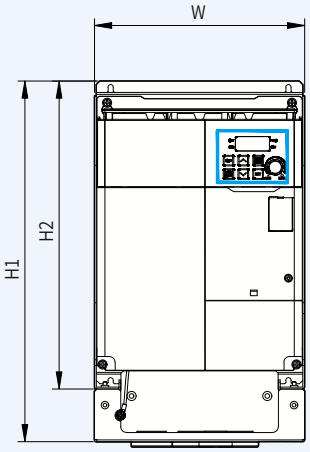

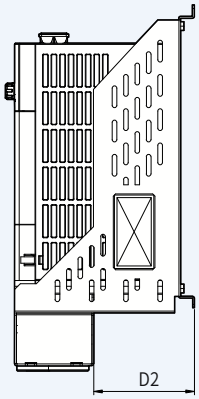

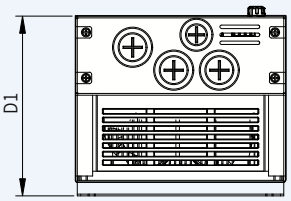

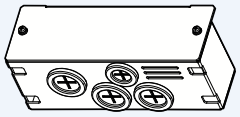

Conduit

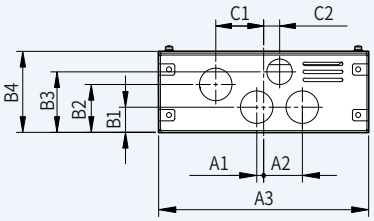

* Without rubber packing

Product (Model)			W	H1	H2	H3	D1	D2	A1	A2	A3	B1	B2	B3	B4	C1	C2	Product weight [Kg]	Conduit weight [Kg]
D Frame	3-Phase 200V	LSLV0055G100-2	184.2	316.1	269.9	60.8	157.6	88.2	6	34	184.2	22	42	53	71	42	14	3.08	2.1
			[7.252]	[12.445]	[10.626]	[2.394]	[6.205]	[3.472]	[0.236]	[1.339]	[7.252]	[0.866]	[1.654]	[2.087]	[2.795]	[1.654]	[0.551]		
		LSLV0075G100-2	184.2	316.1	269.9	60.8	157.6	88.2	6	34	184.2	22	42	53	71	42	14	3.21	2.1
			[7.252]	[12.445]	[10.626]	[2.394]	[6.205]	[3.472]	[0.236]	[1.339]	[7.252]	[0.866]	[1.654]	[2.087]	[2.795]	[1.654]	[0.551]		
	3-Phase 400V	LSLV0055G100-4	184.2	316.1	269.9	60.8	157.6	88.2	6	34	184.2	22	42	53	71	42	14	3.08	2.1
			[7.252]	[12.445]	[10.626]	[2.394]	[6.205]	[3.472]	[0.236]	[1.339]	[7.252]	[0.866]	[1.654]	[2.087]	[2.795]	[1.654]	[0.551]		
		LSLV0075G100-4	184.2	316.1	269.9	60.8	157.6	88.2	6	34	184.2	22	42	53	71	42	14	3.12	2.1
			[7.252]	[12.445]	[10.626]	[2.394]	[6.205]	[3.472]	[0.236]	[1.339]	[7.252]	[0.866]	[1.654]	[2.087]	[2.795]	[1.654]	[0.551]		

Dimensions

Conduit

Units: mm [Inches]

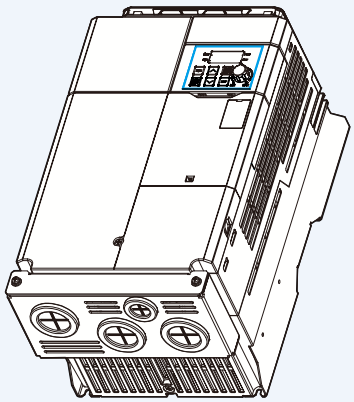

Drive + Conduit

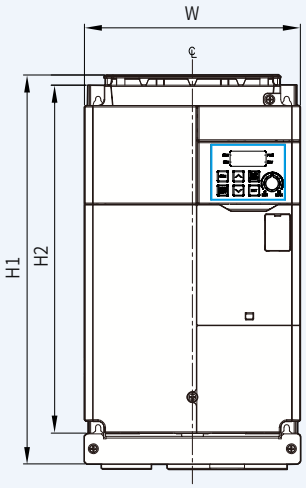

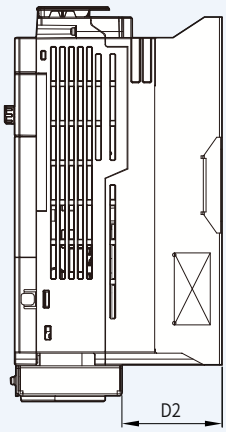

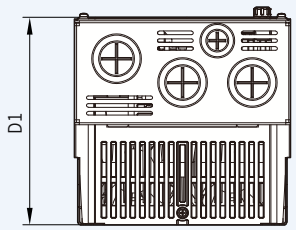

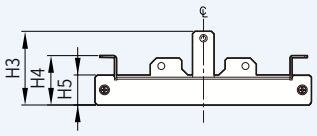

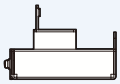

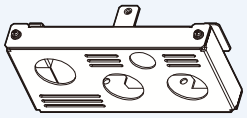

Conduit

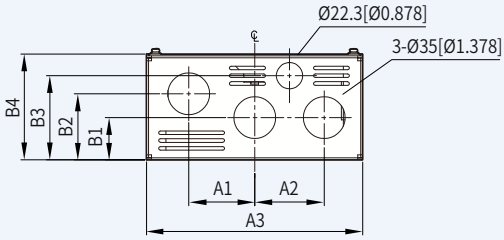

* After removing rubber packing

Product (Model)			W	H1	H2	H3	H4	H5	D1	D2	A1	A2	A3	B1	B2	B3	B4	Product weight [Kg]	Conduit weight [Kg]
E Frame	3-Phase 200V	LSLV0110G100-2	180	324	290	61.3	41.1	25	173	83.5	55	58	180	35	55	70	88.1	4.84	0.45
			[7.087]	[12.756]	[11.417]	[2.413]	[1.618]	[0.984]	[6.811]	[3.287]	[2.165]	[2.283]	[7.087]	[1.378]	[2.165]	[2.756]	[3.468]		
	3-Phase 400V	LSLV0110G100-4	180	324	290	61.3	41.1	25	173	83.5	55	58	180	35	55	70	88.1	4.89	0.45
			[7.087]	[12.756]	[11.417]	[2.413]	[1.618]	[0.984]	[6.811]	[3.287]	[2.165]	[2.283]	[7.087]	[1.378]	[2.165]	[2.756]	[3.468]		
		LSLV0150G100-4	180	324	290	61.3	41.1	25	173	83.5	55	58	180	35	55	70	88.1	4.91	0.45
			[7.087]	[12.756]	[11.417]	[2.413]	[1.618]	[0.984]	[6.811]	[3.287]	[2.165]	[2.283]	[7.087]	[1.378]	[2.165]	[2.756]	[3.468]		

Units: mm [Inches]

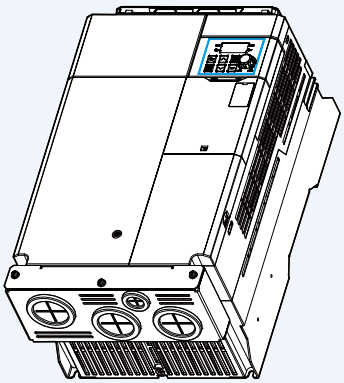

Drive + Conduit

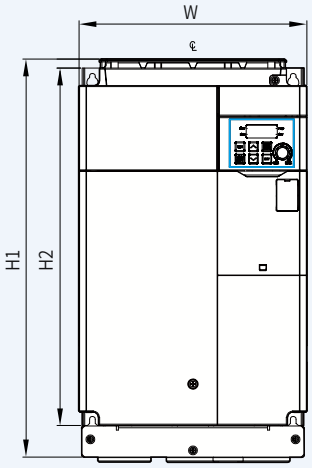

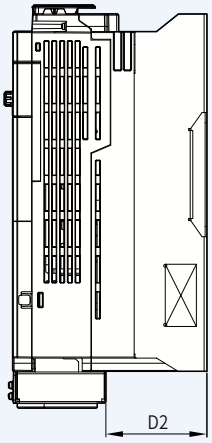

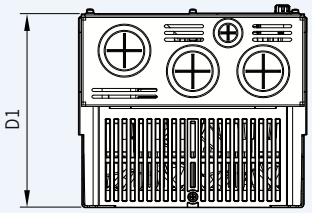

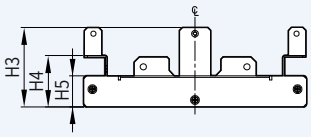

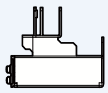

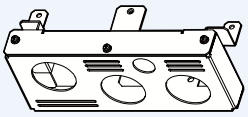

Conduit

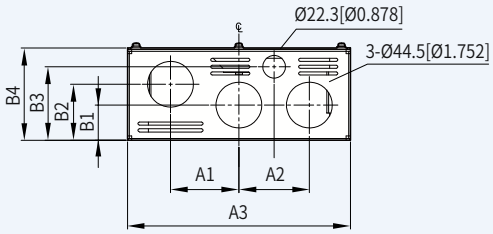

* After removing rubber packing

Product (Model)			W	H1	H2	H3	H4	H5	D1	D2	A1	A2	A3	B1	B2	B3	B4	Product weight [Kg]	Conduit weight [Kg]
F Frame	3-Phase 200V	LSLV0150G100-2	220	384	345	76.5	49.6	30	187	97.3	66	68	215	34	54	71	89.1	7.6	0.58
			[8.661]	[15.118]	[13.583]	[3.012]	[1.953]	[1.181]	[7.362]	[3.831]	[2.598]	[2.677]	[8.456]	[1.339]	[2.126]	[2.795]	89.1[3.508]		
	3-Phase 400V	LSLV0185G100-4	220	384	345	76.5	49.6	30	187	97.3	66	68	215	34	54	71	89.1	7.63	0.58
			[8.661]	[15.118]	[13.583]	[3.012]	[1.953]	[1.181]	[7.362]	[3.831]	[2.598]	[2.677]	[8.456]	[1.339]	[2.126]	[2.795]	89.1[3.508]		
		LSLV0220G100-4	220	384	345	76.5	49.6	30	187	97.3	66	68	215	34	54	71	89.1	7.65	0.58
			[8.661]	[15.118]	[13.583]	[3.012]	[1.953]	[1.181]	[7.362]	[3.831]	[2.598]	[2.677]	[8.456]	[1.339]	[2.126]	[2.795]	89.1[3.508]		

Dimensions

Conduit

Units: mm [Inches]

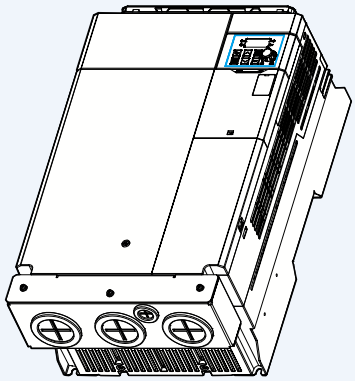

Drive + Conduit

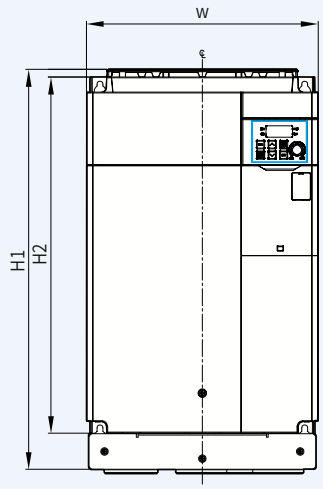

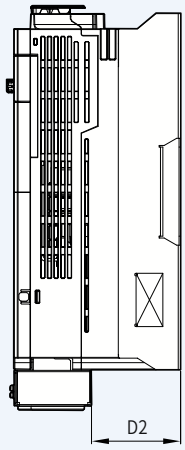

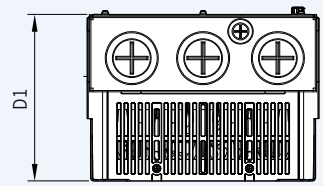

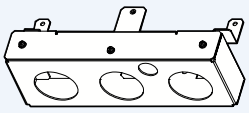

Conduit

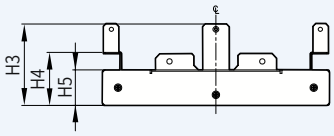

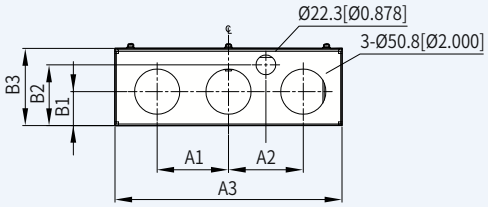

* After removing rubber packing

Product (Model)			W	H1	H2	H3	H4	H5	D1	D2	A1	A2	A3	B1	B2	B3	Product weight [Kg]	Conduit weight [Kg]
G Frame	3-Phase 200V	LSLV0185G100-2	260	449	400	91.5	59.6	40	187	100	80	84	255	38	68	86.6	11.1	0.77
			[10.236]	[17.677]	[15.748]	[3.602]	[2.346]	[1.575]	[7.362]	[3.937]	[3.150]	[3.307]	[10.039]	[1.496]	[2.677]	[3.409]		
		LSLV0220G100-2	260	449	400	91.5	59.6	40	187	100	80	84	255	38	68	86.6	11.18	0.77
			[10.236]	[17.677]	[15.748]	[3.602]	[2.346]	[1.575]	[7.362]	[3.937]	[3.150]	[3.307]	[10.039]	[1.496]	[2.677]	[3.409]		

Memo

EMI / RFI POWER LINE FILTERS

LS inverters, G100 series

RFI FILTERS

THE LS RANGE OF POWER LINE FILTERS **FF (Footprint)** SERIES, HAVE BEEN SPECIFICALLY DESIGNED WITH HIGH FREQUENCY **LS INVERTERS.** THE USE OF LS FILTERS, WITH THE INSTALLATION ADVICE OVERLEAF HELP TO ENSURE TROUBLE FREE USE ALONG SIDE SENSITIVE DEVICES AND COMPLIANCE TO CONDUCTED EMISSION AND IMMUNITY STANDARDS TO **EN 50081 -> EN61000-6-3:02 and EN61000-6-1:02**

CAUTION

IN CASE OF A LEAKAGE CURRENT PROTECTIVE DEVICES IS USED ON POWER SUPPLY, IT MAY BE FAULT AT POWER-ON OR OFF.
IN AVOID THIS CASE, THE SENSE CURRENT OF PROTECTIVE DEVICE SHOULD BE LARGER THAN VALUE OF LEAKAGE CURRENT AT WORST CASE IN THE BELOW TABLE.

RECOMMENDED INSTALLATION INSTRUCTIONS

To conform to the EMC directive, it is necessary that these instructions be followed as closely as possible. Follow the usual safety procedures when working with electrical equipment. All electrical connections to the filter, inverter and motor must be made by a qualified electrical technician.

1- Check the filter rating label to ensure that the current, voltage rating and part number are correct.
2- For best results the filter should be fitted as closely as possible to the incoming mains supply of the wiring enclousure, usually directly after the enclousures circuit breaker or supply switch.
3- The back panel of the wiring cabinet of board should be prepared for the mounting dimensions of the filter. Care should be taken to remove any paint etc... from the mounting holes and face area of the panel to ensure the best possible earthing of the filter.
4- Mount the filter securely.
5- Connect the mains supply to the filter terminals marked LINE, connect any earth cables to the earth stud provided. Connect the filter terminals marked LOAD to the mains input of the inverter using short lengths of appropriate gauge cable.
6- Connect the motor and fit the ferrite core (output chokes) as close to the inverter as possible. Armoured or screened cable should be used with the 3 phase conductors only threaded twice through the center of the ferrite core. The earth conductor should be securely earthed at both inverter and motor ends. The screen should be connected to the enclousure body via and earthed cable gland.
7- Connect any control cables as instructed in the inverter instructions manual.

IT IS IMPORTANT THAT ALL LEAD LENGHTS ARE KEPT AS SHORT AS POSSIBLE AND THAT INCOMING MAINS AND OUTGOING MOTOR CABLES ARE KEPT WELL SEPARATED.

FF SERIES (Footprint)

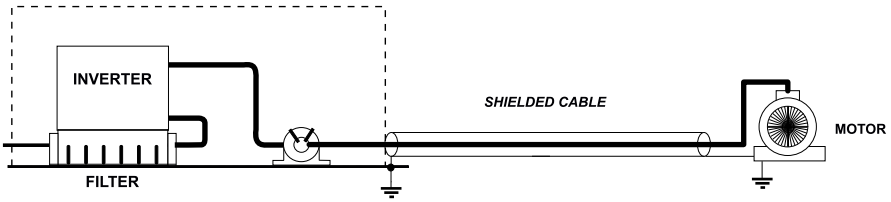

G100 series / Footprint Filters											
INVERTER	POWER	CODE	CURRENT	VOLTAGE	LEAKAGE CURRENT	DIMENSIONS L W H	MOUNTING Y X	WEIGHT	MOUNT	FIG.	OUTPUT CHOKES
THREE PHASE					NOM. MAX.						
0004G100-4	0.4kW		6A	400VAC	0.5mA 27mA	213x86x60	199x46	1.2 Kg aprox	M5	A	FS-2
0008G100-4	0.8kW										
0015G100-4	1.5kW		12A	400VAC	0.5mA 27mA	226x101x60	212x61	1.5 Kg aprox	M5	A	FS-2
0022G100-4	2.2kW										
0040G100-4	4kW		16A	400VAC	0.5mA 27mA	242x135x60	228x90	1.8 Kg aprox	M5	A	FS-2
0055G100-4	5.5kW		30A	400VAC	0.5mA 27mA	289x180x60	275x135	2 Kg aprox	M5	A	FS-2
0075G100-4	7.5kW										
0110G100-4	11kW		50A	400VAC	0.5mA 27mA	369x180x65	344x135	2.5 Kg aprox	M5	A	FS-3
0150G100-4	15kW										
0185G100-4	18.5kW		60A	400VAC	0.5mA 27mA	424x220x65	399x150	2.8 Kg aprox	M5	A	FS-3
0220G100-4	22kW		70A	400VAC	0.5mA 27mA	479x260x65	454x190	2.8 Kg aprox	M6	A	FS-3

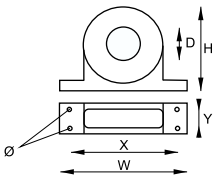

FS SERIES (output chokes)

CODE	D	W	H	X	Ø
FS – 2	28.5	105	62	90	5
FS – 3	48	150	110	125 x 30	5
FS – 4	58	200	170	180 x 45	5

DIMENSIONS

FF SERIES (Footprint)

FIG. A

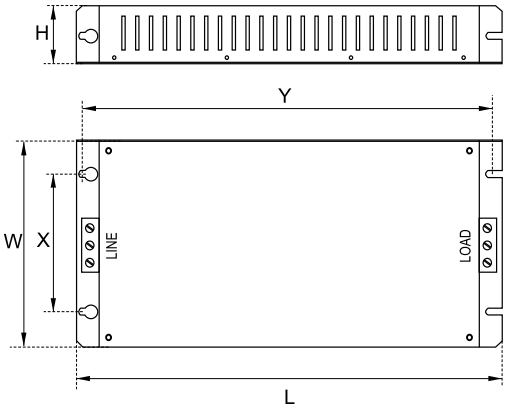

This is a sample of the figure, the client will define the end finish.

Polígono Industrial Can Bernades
08130 Sta.Perpetua de Mogoda
(Barcelona)
SPAIN / ESPAÑA

Tel: +34 - 93 574 70 17
Fax: +34 - 93 544 84 33
E-mail: info@lifasa.com
http: www.lifasa.com

※ if you have questions about filter option, please contact to LS ELECTRIC Europe office.

FUTURING SMART ENERGY

We open up a brighter future through
efficient and convenient energy solutions.

Safety Instructions

- For your safety, please read user's manual thoroughly before operating.
- Contact the nearest authorized service facility for examination, repair, or adjustment.
- Please contact qualified service technician when you need maintenance.
  Do not disassemble or repair by yourself!
- Any maintenance and inspection shall be performed by the personnel having expertise concerned.

- According to The WEEE Directive, please do not discard the device with your household waste.

LS ELECTRIC

www.ls-electric.com

■ Headquarter
LS-ro 127(Hogye-dong) Dongan-gu, Anyang-si, Gyeonggi-Do, 14119, Korea

■ Seoul Office
LS Yongsan Tower, 92, Hangang-daero, Yongsan-gu, Seoul, 04386, Korea
Tel: 82-2-2034-4033, 4888, 4703 Fax: 82-2-2034-4588
E-mail: automation@ls-electric.com

■ Overseas Subsidiaries

•LS ELECTRIC Japan Co., Ltd. (Tokyo, Japan)
Tel: 81-3-6268-8241 E-Mail: japan@ls-electric.com

•LS ELECTRIC (Dalian) Co., Ltd. (Dalian, China)
Tel: 86-411-8730-6495 E-Mail: china.dalian@lselectric.com.cn

•LS ELECTRIC (Wuxi) Co., Ltd. (Wuxi, China)
Tel: 86-510-6851-6666 E-Mail: china.wuxi@lselectric.com.cn

•LS ELECTRIC Middle East FZE (Dubai, U.A.E.)
Tel: 971-4-886-5360 E-Mail: middleeast@ls-electric.com

•LS ELECTRIC Europe B.V. (Hoofddorp, Netherlands)
Tel: 31-20-654-1424 E-Mail: europartner@ls-electric.com

•LS ELECTRIC America Inc. (Chicago, USA)
Tel: 1-800-891-2941 E-Mail: sales.us@lselectricamerica.com

•LS ELECTRIC Türkiye Co., Ltd.
Tel: 90-212-806-1225 E-Mail: Türkiye@ls-electric.com

■ Overseas Branches

•LS ELECTRIC Tokyo Office (Japan)
Tel: 81-3-6268-8241 E-Mail: tokyo@ls-electric.com

•LS ELECTRIC Beijing Office (China)
Tel: 86-10-5095-1631 E-Mail: china.auto@lselectric.com.cn

•LS ELECTRIC Shanghai Office (China)
Tel: 86-21-5237-9977 E-Mail: china.auto@lselectric.com.cn

•LS ELECTRIC Guangzhou Office (China)
Tel: 86-20-3818-2883 E-Mail: china.auto@lselectric.com.cn

•LS ELECTRIC Chengdu Office (China)
Tel: 86-28-8670-3201 E-Mail: china.auto@lselectric.com.cn

•LS ELECTRIC Qingdao Office (China)
Tel: 86-532-8501-2065 E-Mail: china.auto@lselectric.com.cn

•LS ELECTRIC Nanjing Office (China)
Tel: 86-25-8467-0005 E-Mail: china.auto@lselectric.com.cn

•LS ELECTRIC Bangkok Office (Thailand)
Tel: 66-90-950-9683 E-Mail: thailand@ls-electric.com

•LS ELECTRIC Jakarta Office (Indonesia)
Tel: 62-21-2933-7614 E-Mail: indonesia@ls-electric.com

•LS ELECTRIC Moscow Office (Russia)
Tel: 7-499-682-6130 E-Mail: info@lselectric-ru.com

•LS ELECTRIC America Western Office (Irvine, USA)
Tel: 1-949-333-3140 E-Mail: america@ls-electric.com

•LS ELECTRIC Italy office (Italy)
Tel: 39-030-8081-833 E-Mail: italia@ls-electric.com

Search SOLUTION SQUARE on Google. Visit at sol.ls-electric.com

2023. 12

Specifications in this catalog are subject to change without notice due to continuous product development and improvement.

ⓒ 2019. 05 LS ELECTRIC Co.,Ltd. All rights reserved. / (06) 2023. 12 Human Power